This is a digital copy of a book that was preserved for generations on library shelves before it was carefully scanned by Google as part of a project to make the world's books discoverable online.

It has survived long enough for the copyright to expire and the book to enter the public domain. A public domain book is one that was never subject to copyright or whose legal copyright term has expired. Whether a book is in the public domain may vary country to country. Public domain books are our gateways to the past, representing a wealth of history, culture and knowledge that's often difficult to discover.

Marks, notations and other marginalia present in the original volume will appear in this file - a reminder of this book's long journey from the publisher to a library and finally to you.

Usage guidelines

Google is proud to partner with libraries to digitize public domain materials and make them widely accessible. Public domain books belong to the public and we are merely their custodians. Nevertheless, this work is expensive, so in order to keep providing this resource, we have taken steps to prevent abuse by commercial parties, including placing technical restrictions on automated querying.

We also ask that you:

+ *Make non-commercial use of the files* We designed Google Book Search for use by individuals, and we request that you use these files for personal, non-commercial purposes.

+ *Refrain from automated querying* Do not send automated queries of any sort to Google's system: If you are conducting research on machine translation, optical character recognition or other areas where access to a large amount of text is helpful, please contact us. We encourage the use of public domain materials for these purposes and may be able to help.

+ *Maintain attribution* The Google "watermark" you see on each file is essential for informing people about this project and helping them find additional materials through Google Book Search. Please do not remove it.

+ *Keep it legal* Whatever your use, remember that you are responsible for ensuring that what you are doing is legal. Do not assume that just because we believe a book is in the public domain for users in the United States, that the work is also in the public domain for users in other countries. Whether a book is still in copyright varies from country to country, and we can't offer guidance on whether any specific use of any specific book is allowed. Please do not assume that a book's appearance in Google Book Search means it can be used in any manner anywhere in the world. Copyright infringement liability can be quite severe.

About Google Book Search

Google's mission is to organize the world's information and to make it universally accessible and useful. Google Book Search helps readers discover the world's books while helping authors and publishers reach new audiences. You can search through the full text of this book on the web at `http://books.google.com/`

B 465518

Digitized by Google

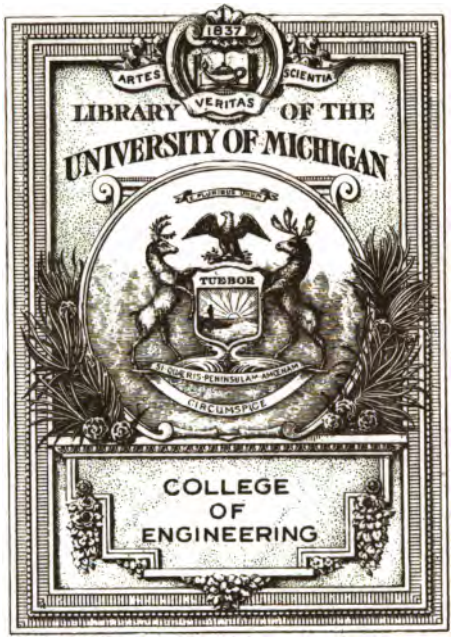

Digitized by Google

TJ
840
.W61

Digitized by Google

Digitized by Google

WATER RIGHTS DETERMINATION

From an Engineering Standpoint

BY

JAY M. WHITHAM, M.A., M.E., C.E.

CONSULTING ENGINEER

Formerly U. S. Naval Engineer; Later Prof. of Engineering, Univ. of Ark.
Member of A.S.M.E.; A.S.N.E.; A.S.N.A. and M.E.; N.E.W.W.A., etc.;
Author of Steam Engine Design, Constructive Steam Engineering, etc.

"I don't think much of a man
who is not wiser to-day than
he was yesterday."
—*Lincoln*

FIRST EDITION

NEW YORK
JOHN WILEY & SONS, INC.
LONDON: CHAPMAN & HALL, LIMITED
1918

Digitized by Google

COPYRIGHT, 1918
BY
JAY M. WHITHAM

PRESS OF
BRAUNWORTH & CO.
BOOK MANUFACTURERS
BROOKLYN, N. Y.

Digitized by Google

DEDICATED

TO THE MEMORY OF

Caroline A. (Rowe) Whitham

MARCH 1, 1826–DEC. 28, 1916

"God never made anything that so reflected the attributes of love as the heart of a Mother."

—*H. A. Mooney*

333997

Digitized by Google

Digitized by Google

PREFACE AND INTRODUCTION

"The wisdom of the wise and the experience of ages may be preserved by quotation." —BENJ. DISRAELI.

THIS book is intended to assist an owner of an indefinite water right in determining:

1. The meaning of his right as expressed in horsepowers, and

2. The number of cubic feet of water per second to which he is entitled.

The Author has had much experience, during the past twenty-seven years, in interpreting such water grants. It was necessary to view the site, ascertain the head possibilities upon the property, study the state of the particular art referred to in the grant, as applying to the time and place, and then learn the types and efficiencies of wheels known and available for use.

In pursuing such studies the Author has collected the various books relating to milling, millwrighting, tanning, saw mills, paper making, blast furnaces, rolling mills, mechanics, science, water wheels, etc., referred to in the bibliography appended, and others; has digested their contents into some 1800 pages of typewriting, and prepared an extensive topical index thereof; has visited remote localities, examined and tested many existing and operating examples of the early days, as well as ruins of abandoned mills; has conversed or corresponded with scores of millers, millwrights, and operatives in the old

Digitized by Google

mills; and has studied many judgments of courts determining the meanings of water grants, and abstracted the printed records thereof, after visiting the properties referred to in the judgments.

A book of this nature is necessarily a compilation. With the wealth of data obtained it is impossible, in a work of this size, to give more than citations from some of the representative writings. Many tests and power determinations by the author are here published for the first time.

At sundry times from before 1800 to even after 1900, owners of water powers have granted rights as measured by specific uses, such as to operate "a run of stones," or "one saw," etc., and an equally large number of grants do not have even this restriction, but simply allude to the nature of the industry to be driven. Thus, on one dam in New York, at times from 1808 to 1850, separate water grants were sold for a saw mill, a woolen mill, a machine shop, nail works, a paper mill, a tannery, a force pump, a trip hammer, a carding mill, an oil mill, etc., all being subordinate to an undefined cotton mill. There was no mention of the number of saws, the sets of woolen machinery, the mechanisms in the shop, the number of nail cutters, the equipment or product of the paper mill, the number and kind of hides tanned per day, etc. No one is living who worked in the mills as constructed. None of the original mills are in existence. The water rights have been absorbed by some half dozen industries. The industrial character of the locality has changed.

Should the owners, or the courts, endeavor to measure

Digitized by Google

these rights it will be necessary to consult some of the old books referred to in this work, to study old local histories and even old local newspapers, to take the opinions of old millwrights and operators of old saw mills, oil mills, tanneries, etc., gathered from nearby localities, and of engineers familiar (by research) with the state of the arts and with water wheels of from 1808 to 1850. It will, of course, be necessary to examine the sites and form a judgment as to the heads which could reasonably be developed for the wheels available for use at the times.

Too much reliance should not be given to the various old books on millwrighting. Evans' book for its time (1795) was probably an authority. The flour milling art quickly outgrew that work. Subsequent editions were rearrangements of the old book. Jones, a teacher of mechanics in a night school, could add no milling value by his revisions. The works of Hughes and Pallett were prepared by men of grist mill experience, and were largely compiled from older books representing English practice. Craik, "a hard-working, practical millwright and miller" wrote an excellent book, but omits all allusions to power except for saw mills. None of these writers were engineers or knew much about horse-power and accurate water measurements.

It is to be remembered that when most of these early grants were made there were neither mechanical engineering schools nor professional hydraulic and mechanical engineers. The engineering was done by millwrights —men clever with their hands in fashioning water wheels, mill buildings, dams, etc., and generally possessed of a

Digitized by Google

fairly clear knowledge of stream possibilities and hydraulic principles. They were not gifted in writing, were secretive and jealous of their knowledge, and passed it on to apprentices. The writers were either inventors, owners of small mills, or mathematicians and professors.

There were growths in every industry from time to time. Evans' mill of 1795 was not the flour mill of 1830. "Flat milling" was succeeded by the new "half-high" system, only to be replaced by the "combination" system of rolls for breaking down the wheat and buhrs for grinding its product. Then came the "roller" mill. The old upright saw, with its single blade, gave way to the gang saw. Next the circular came and finally predominated. The time for tanning a hide was greatly reduced by chemical treatment. The hand-formed was replaced by the machine-made sheet of paper. Rags largely gave way to wood for paper stocks. Improvements were made in textile machinery. The tendency all along was to "speed up" and get a larger volume of product, thus using more power. It is, therefore, evident that the state of the art for the time of the grant should be known. This work may be of some service in this respect.

When the earlier grants were made, wooden flutter, undershot, breast, overshot, and tub wheels predominated, one or the other being used as the head at the property and the volume of flow in the stream would justify. Then came the flat-vaned, central-discharge, scroll-cased, wooden wheel and the turbine. Finally, towards the end of the 1840's and through the '50's there was an epidemic of turbines. Every foundryman near a rapids in

Digitized by Google

a river brought out his own design. A total of over 300 U. S. patents for turbines were granted up to 1855. These early turbines were generally crude and inefficient as compared with those of to-day.

It is, therefore, apparent that, when interpreting an early grant, it is essential that the state of the water-wheel art for the time and place should be applied. This work is intended as an aid in determining, by the two steps first outlined, the meaning of an indefinite water power grant. It should, also, be of assistance when forming new grants. If it serves these purposes, in even a small measure, the writer's labors are rewarded. The personal views and opinions of the Author are given in connection with the various topics discussed.

JAY M. WHITHAM.

PHILADELPHIA, PA.,
March 1, 1918.

Digitized by Google

Digitized by Google

CONTENTS

PAGE

Preface and Introduction v

PART ONE

Weight of a Bushel of Wheat 1
Bushels of Wheat per Barrel of Flour 2
Power Required to Grind a Bushel of Wheat per Hour in a Buhr Mill 4
Power Required to Clean and Grind a Bushel of Wheat per Hour and Convert it into Flour in a Buhr Mill 8
Power to Drive the Machinery Accompanying Buhr Stones 14
Speeds of Mill Stones 15
Bushels of Wheat Ground per Run of Stones per Hour 17
History of Buhr Stone Milling in Oswego, N. Y 19
Power per 100 Barrels of Flour per Twenty-four Hours in Buhr, in Combined Roller and Buhr, and in Roller Mills 21
Power per Run of Stones, Including its Accompanying Machinery, in Merchant and Grist Mills 28
Run of Stones for Corn Meal and Feed Mills 45
Corn Cracker or Corn Crusher 48
Water Rights for a Distillery 53
Starch Mill 53
Oat Meal Mill 54
Pearl Barley Mill 54
Saw Mill Grants 56
Shingle Mill 64
Bark Mills and Tanneries 66
Axe Factory 70
Machine Shop Rights 70
Blast Furnace, Bellows and Blowers in Iron Works 73
Iron Rolling Mills 76
Tilt or Trip Hammer 77
Nail Factory 79
Carding and Fulling Mills 80

Digitized by Google

PAGE
Woolen Mills 82
Cotton Mills 87
Plaster Mills 102
Paper Mills 102
Oil Mills 107

PART TWO

Orifices or Apertures 109
Coefficient of Discharge through Standard Orifices 113
Coefficient of Discharge through Bulkhead Gates 115
Coefficient of Discharge for Gates of Flutter, Undershot, Breast and Overshot Wheels 117
Coefficient of Discharge for Tub, Flat-vaned Central-discharge Scroll-cased Wheels and Other Wheels Having Tapered Spouts 119
Coefficient of Discharge for Turbines 120
Grants of Inches of Water 122
Flutter or Saw Mill Wheel Grants 129
Tub Wheel Grants 132
Wooden Scroll-cased Central Discharge Wheel Grants 138
Undershot Wheel Grants 146
Poncelet Wheel Grants 153
Overshot Wheel Grants 154
Pitchback Wheel Grants 170
Breast Wheel Grants 170
Turbine Wheel Grants 176

Bibliography 187

Index 195

Digitized by Google

ERRATA

Page 5, line 13, *for* 10-foot *read* 16-foot.
18, near center of page, *read* "In 1858 the 112 runs of stones," etc.
24, *for* Mouston, O., *read* Mouston, Wis.
58, line 11, omit the word "to."
96, line 4, *for* p. 101 *read* p. 88.
114, 3d line from bottom, *for* p. 128 *read* p. 112.
129, line 13, *for* aerpture *read* aperture.
136, line 14, *for* 1727 *read* 1797.
171, line 23, *for* p. 181 *read* p. 159.
192, line 3, *for* Composition *read* Comparison.

white wheat per bushel and 51 to 60 pounds for red wheat (1866 Ed. p. 116.)

In a 1916 report of the U. S. Dept. of Agriculture, the weights per bushel of wheat for that year of poor yield were given as ranging from 45.8 pounds in South Dakota to 59.8 in Oregon (*Mill. Rev.*, Oct., 1916).

Bulletin 557 of the U. S. Dept. of Agriculture (1917) gave the following weights of *cleaned* wheat per bushel:

Digitized by Google

Soft red winter...	61.4 lb.	Hard red winter..	62.1 lb.
Durum.....	62.8 lb.	Hard red spring..	60.2 lb.

With a variable weight per bushel it follows that the bushels of wheat used per barrel of flour cannot be constant.

BUSHELS OF WHEAT PER BARREL OF FLOUR

There is no definite and established number of bushels of wheat required to produce a barrel of flour. It ranged from 4.375 to over 5 bushels per barrel of flour in buhr mills, and these consumptions are required now for roller mills in their practical operation from day to day.

Six sets of experiments by Oliver Evans, made before 1795, gave 5.16 bushels of wheat per barrel of flour, the range being from 4.9 to 5.6 bushels (Bennett and Elton, p. 197).

Hughes, 1851, p. 203, said, "It is well known, that, but a few years ago, it required, with the utmost economy, 5 good bushels of wheat to make a barrel of superfine flour, and now it is produced, of equally good, or better quality, out of 4 bushels and 15 to 25 pounds, . . ."

Pallett's tests with various wheats showed an average of 296 pounds or 4.93 bushels of wheat per barrel of "superfine flour" (1866, p. 116).

Moore, 1878, p. 442, and Haswell, 1909, p. 572, gave 5 bushels of Northern and 4.5 of Southern wheat per barrel of flour, and 2 pounds of flour for 3 of bread.

Jas. Emerson gave from 4.45 to 5.16 bushels of 60-pound wheat to a barrel of flour (Emerson, 1894, p. 118).

Oliver, 1913, p. 66, states "there are wheats that will

Digitized by Google

yield as low as 4.16 bushels . . . per barrel; and there are others that will require over 5 bushels . . ."

The Millers' Review, Philadelphia, in 1916 and 1917 published reports from 199 mills of various kinds and capacities, operating in different parts of the United States, averaging 4.89 bushels of wheat per barrel of flour, with a range from 4.25 to 5.5 bushels.

Six experienced millers, who operated in merchant buhr mills along the Oswego Valley in New York, in from 1850 to 1870, and two millers operating in similar mills in Richmond, Lynchburg, and Danville, Va., in 1860 to 1870, testified in court that such mills used about 5 bushels of wheat per barrel of flour.

A test at Palestine, Ill., in 1916, gave a barrel of flour with 4.6 bushels of wheat (*Dig.* IV, 65).

Bulletin 557 of U. S. Dept. of Agriculture, 1917, recites laboratory tests of 1283 samples of wheat. Calling 196 pounds the weight of a barrel of flour, and 60 pounds to a bushel of wheat, the average of the laboratory tests was 4.62 bushels of *clean* wheat per barrel of flour.

Holliwell gives, p. 244, the products from wheat milling as 70 per cent flour, 13.5 per cent pollard or thirds, 15.5 per cent bran, and 1 per cent for dust, loss and evaporation. Upon this basis 60 pounds of wheat yields 42 pounds of flour, and 4.7 bushels make a barrel in English mills.

The U. S. Government prescribed in December, 1917, during the War of the Nations, that a barrel of flour should be made from 264 pounds of wheat, or 4.4 bushels of 60 pounds each. This has required millers to put some middlings into the flour.

Digitized by Google

POWER TO GRIND A BUSHEL OF WHEAT AN HOUR IN A BUHR MILL

As distinguished from grinding and dressing in flour making, the *power used simply to grind the bushel of wheat per hour* varies widely among authorities.

Oliver Evans * in his 1795 edition, analyzed the power needed for grinding a bushel of wheat per hour in "cubochs," and defined this unit as equivalent to 1 cubic foot of water falling 1 foot in a second. This unit is, therefore, about one-ninth of a gross or theoretic horse-power. His results were obtained with overshot wheels operating a 5-foot stone at about 102 R.P.M., and are converted into the following table:

Reference.	Bushels Ground per Hour.	Total Gross Horse-power.	Gross Horse-power per Bushel per Hour.
Part I, p. 94.....	3.75	12.5	3.33
110.....	5.	12.73	2.55
115.....	3.8	9.94	2.62
119.....	5.2	7.27	1.4

Calling the efficiency of the overshot wheel 75 per cent, the actual power per bushel per hour for *grinding*, as deduced from Evans, varied from 2.5 to 1.05 net or actual horse-power.

D'Aubuisson's "Hydraulics" of 1838 (Bennett's trans-

* Evans coined the term "cuboch." No other writer has adopted or used it. Evans did not allude to the term "horse-power" in his book. He did not mention the efficiency of any water wheel, nor the net power used or required in any operation.

Digitized by Google

lation of 1852) gives, pp. 448–50, ten tests by Mallett, Evans, Eagen, Montaubau, Tardy, Piobert, and others, showing an average of 1.05 horse-power for *grinding* a bushel of wheat in an hour.

Byrnes "Practical Model Calculator" (1851), on p. 327 of 1866 Ed., stated that 30 cubic feet of water per second falling through 10 feet upon the floats of an undershot wheel, have power to *grind* 4 bolls (or 8 bushels, Glynn, p. 88) of wheat per hour, the wheel efficiency being 31.45 per cent, which corresponds to 1.34 net horse-power per bushel.

Hughes, 1851, p. 62, gave an 84-inch Vandewater turbine, 65 per cent efficiency, 10-foot head, using 400 inches of water, to *grind* 98 bushels of wheat per hour, which is 1.05 horse-power per bushel.

Neville, 1860, p. 399, states that 1 horse-power is needed to *grind* 1 bushel of wheat an hour, "but much depends on the state of the stones and grain."

Beardmore, 1850 (p. 57 of 1862 Ed.), states that "An ordinary mill will *grind* 1 bushel per hour per horse-power —a very good one 1.2 bushel."

Bartley, 1886, p. 34, gives 15 horse-power for the *grinding* of 11 bushels of wheat per hour, or 1.36 horse-power per bushel.

Oliver, 1913, p. 104, gives 7.5 horse-power for *grinding* 6 to 8 bushels of wheat per hour on a 4-foot stone, or from 0.94 to 1.1 horse-power per bushel.

Molesworth, 1862 (p. 424 of 1896 Ed.), states that 1 horse-power per bushel per hour is required for *grinding*, with a stone, or 2 horse-power for cleaning, grinding and dressing. Hard wheat requires more power.

Digitized by Google

Moore, 1880, p. 651, quotes "The Miller" (English), where a stone, without "exhaust" or "combined blast and exhaust," uses 1 horse-power per bushel per hour, and in Scotland 6 horse-power for 4 bushels, or 1.5 horse-power per bushel hour for *grinding*.

Nystrom, 1865, p. 154, gives 4.36 horse-power to *grind* 5 bushels of wheat, or 0.87 horse-power per bushel-hour with a 4-foot stone. Haswell, 1878, p. 556, gives the same figure.

Emerson, 1894, p. 105, claimed that 1 horse-power per bushel is too small for *grinding*.

Tests by Gibson, 1868 (Reynolds' "Wheel Book"), at Stockholm, N. Y., used 5.5 horse-power to *grind* 5 bushels per hour; 6.2 horse-power for 6 bushels; and 14.8 horse-power for 14 bushels, or an average of 1.08 horse-power per bushel-hour.

Wolfe's "Mill Book," p. 28, gives a range of from 0.9 to 1.67 horse-power per bushel per hour for *grinding*, with French buhrs of various sizes.

A. Caseo, a miller of 58 years' experience in large buhr and roller mills in various parts of New York, found that "a run of 4-foot mill stones will not successfully and economically grind more than 16 bushels per hour, consuming about 18 horse-power up to 18.67." This is for *grinding* alone, and is at the rate of from 1.12 to 1.17 horse-power per bushel-hour (*Dig.* IV, 260).

Gump's "Old Mill Book" gives 16 horse-power for a 3-foot stone at 200 R.P.M. for the *grinding* of $10\frac{1}{2}$ bushels of wheat per hour, or 1.52 horse-power per bushel.

Capt. W. H. Snyder, of Batavia, N. Y., a milling engineer of long experience, allows 1 horse-power to *grind*

Digitized by Google

a bushel of wheat an hour, and 0.75 horse-power for the accompanying machinery (*Dig.* IV, 39).

Sage Bros. Mill, Elkhart, Ind., 1888, used 21 horse-power to *grind* 7.5 bushels of wheat per hour, or 2.8 horse-power per bushel (Emerson, 1894, p. 63).

The grain ground (not cleaned, ground and dressed) per hour per horse-power, according to German practice per Weibe, is given by Kozmin on page 191 of his Russian work on "Flour Milling" (1917) as follows, for wheat and rye without and with ventilation:

Grain.	Grinding.	Without Ventilation.	With Ventilation.
Wheat	Single grinding	59.4 lbs.	79.6 lbs.
Wheat	Double grinding	50.4 lbs.	67.3 lbs.
Wheat	Treble grinding	45.0 lbs.	59.4 lbs.
Rye	Single grinding	58.3 lbs.	78.8 lbs.
Rye	Double grinding	34.9 lbs.	47.2 lbs.
Rye	Treble grinding	28.4 lbs.	37.1 lbs.

Ventilation of the buhrs prevented overheating and increased the capacity. It was introduced into the United States in 1825 to 1835.

Fenwick, in 1752, found that a 5-foot stone at 90 R.P.M. ground about 10 per cent more wheat than rye with the same power expenditure (Brewster's "Ferguson" II, 164; Grier, p. 211; Glynn, p. 132).

The engine load at the Millbourne Roller Mills, Philadelphia, when producing 498 barrels of spring wheat flour and 489 of rye flour was 498.6 horse-power. A week later when grinding 1250 barrels of winter wheat flour the load was 476.4 horse-power. That is, it took 22.2 horse-power more to grind 987 barrels of spring wheat and rye flours

Digitized by Google

than 1250 barrels of winter wheat flour (Whitham's tests, 1918).

The power used simply to grind wheat varies with the size of the mill, its gearing, the nature of its construction, the dress and condition of the stones, the rate of feed, and the kind and condition of the wheat, and ranged from 1 *to* 1.5 *horse-power per bushel.*

Roller mills require from 1.25 *to* 1.75 *horse-power per bushel per hour for grinding.*

POWER REQUIRED TO CLEAN AND GRIND A BUSHEL OF WHEAT PER HOUR AND CONVERT IT INTO FLOUR IN A BUHR MILL

The previous topic dealt only with the power used in *grinding* a bushel of wheat per hour with buhrs, while this article relates to the *power needed to make finished flour from wheat.*

From as early as 1757 down to about 1790, in the United States, and to a later date abroad, the flour mill consisted of power-driven stones for grinding, while the handling of wheat and meal, and the cooling, bolting, and packing were done by hand labor (Evans, 1795, Part V, pp. v, vi).

Oliver Evans invented, prior to 1790, the elevator, conveyor, hopper-boy for cooling, the drill and descender. Their introduction into important mills on the Brandywine in Del., at Ellicott City, Md., and at Richmond and Petersburg, Va., had been effected before 1791 (Evans, 1795, Part III, pp. 71, 125–6; Part V, p. vi; also, Bennett and Elton, p. 198). His improvements almost elim-

Digitized by Google

inated hand labor and increased the output of the mill, requiring greater power. Their use gradually became general throughout the milling world.

Earlier than 1795 *grist, toll* or *custom* mills were distinguished from *flouring* or *merchant* mills, the latter being more fully equipped and using greater power for an increased output (Evans, Part III, pp. 85, 88; Part V, p. vi).*

The distinction between grist and merchant mills has many times been recognized in contracts and deeds, as in 1828, when Whitney was prevented by Lewis from building and operating at the north end of the dam across the Susquehanna in Binghamton ". . . a common country *grist* mill, but he may build a *merchant flouring* mill for grinding and packing flour as is usual in what is called a merchant mill" (Recorded July 23, 1828 in Book II, p. 107, Broome Co., N. Y. Clerk's Office).

As in the case of *grinding* the wheat, the authorities differ widely in the amount of power required to *handle, clean and grind the wheat and to cool, bolt and pack the flour*, i.e., in the power needed to *grind and dress* a bushel of wheat per hour. This is explained by variations in mill equipment and condition, and in the wheat used.

The earliest tests of value seem to have been made by Ellwood Morris, C.E., who was appointed by the *Franklin Institute* to investigate certain water wheels. From tests with three "excellent overshot *flouring* mill wheels, with all the modern improvements," Morris, in

* An "exchange" mill received the farmer's grist and exchanged it for flour made from other wheats. It was therefore of the character of a marchant mill (Evans, 1795).

Digitized by Google

1838, found that it took "788 cubic feet of water falling 1 foot per minute to grind and dress 1 bushel of wheat per hour" (*Jour. Frank. Inst.* IV, 3d Series, p. 222; also Weisbach, 1849, II, p. 194). This is about 1.5 gross or theoretic horse-power per bushel per hour. Morris's experiments gave from 79.5 to 84.1 per cent overshot wheel efficiencies. Taking 80 per cent, the net power was 1.2 horse-power. His 1.5 horse-power is quoted by many later writers, such as Scribner (18th Ed., 1878, p. 158) and Drake (1888, p. 164).

Leffel's "Wheel Book" (1883, p. 91) recites that a 56-inch turbine, 6.5-foot head, operated, in Tennessee, at 0.75 gate, *ground and dressed* from 15 to 18 bushels of wheat per hour, which corresponds to from 1.7 to 2 horse-power per bushel.

Wm. Brandt, operating in a 3-run, steam driven, 4-foot buhr mill, in Warren, Ill., in 1870, used 60 horse-power for *grinding and dressing* about 42 bushels per hour. This is equivalent to 1.43 horse-power to grind and dress a bushel per hour (*Dig.* III, 100).

The Krantz buhr mill, near Wrightsville, Pa., has a 24-inch Success wheel, 8-foot head, making and using 18 horse-power for a 4-foot stone grinding 5 bushels per hour, or 24 barrels per day. This is 3.6 horse-power to *grind and dress* a bushel of wheat per hour (*Mill. Rev.*, July, 1916).

L. G. West, of the Quaker City Mills, Philadelphia, gives, as his early experience in small buhr mills, 12 horse-power to *grind and dress* 4.5 bushels of wheat per hour in a 24-barrel grist mill, or 2.67 horse-power per bushel.

H. G. Woolcott, of the Hoffer Mill in Steelton, Pa.,

Digitized by Google

states, from his early experience, that a buhr grist mill *grinding and dressing* 5 bushels per hour uses from 15 to 18 horse-power or from 3 to 3.6 horse-power per bushel of wheat.

Jos. Himmel, miller, at the Exchange 5-run buhr mills in Oswego, from 1868–92, used from 38 to 40 horse-power per run of 4.5 foot stones to produce, with accompanying machinery, 100 barrels per day, with about 20 bushels of wheat per run per hour, or from 1.9 to 2 horse-power to *grind and dress* a bushel per hour in a 500-barrel buhr mill.

Richard Glynn, miller at the Lake Ontario buhr mill, Oswego, 1865–81, with 7 runs of 4.5-foot stones and bolting capacity for 6 runs, and a production of 600 barrels per day, used from 225 to 270 horse-power depending upon the stones and wheat. The wheat ground was about 120 bushels hourly. The power used to grind and dress a bushel of wheat per hour was from 1.75 to 2.25 horse-power.

Jas. Mizen, experienced in buhr milling in England prior to 1870, and in buhr and roller mills of various sizes in New York and Minnesota down to 1895, found that from 4.67 to 5 bushels were used per barrel of flour, and that a 4.5-foot stone and its accompanying machinery, when producing 100 barrels per day, used 35 horse-power. This gives 1.75 horse-power to *grind and dress* a bushel of wheat per hour.

Millwright Wm. H. Bullock determined, from his experience in various States, that the power used to make 2.5 barrels of flour in twenty-four hours is 1 horse-power. Thus, a 250-barrel mill uses 100 horse-power, a 100-barrel mill, 40 horse-power, etc. This is about 2 horse-power to *grind and dress* a bushel of wheat per hour.

Digitized by Google

F. W. Ormsby, C.E., for several years engaged in designing and equipping flour mills in various States, found that the milling trade used 40 horse-power to 100 barrels per twenty-four hours in buhr mills. This figure he verified by wheel experiments and tests at an old Oswego merchant buhr mill. The rule is equivalent to from 1.9 to 2 horse-power to *grind and dress* a bushel of wheat per hour.

Haswell (1878 Ed., 556) states "For each pair of 4-foot stones, with all the accompanying machinery, etc., there is required 15 horse-power. One pair of 4-foot stones will grind about 5 bushels of wheat per hour." This means 3 horse-power to *grind and dress* a bushel per hour. Yet Haswell, on the same page, says that only "0.87 horse-power actually" is required to grind a bushel an hour. That leaves 2.13 horse-power per bushel per hour for the accompany machinery—a result no more absurd than is found in many of the old books on milling.

Molesworth (25th Ed., 1896, 424) gives 2 horse-power as required to *grind and dress* a bushel of wheat per hour in a buhr mill, dividing the power as follows:

Grinding	1.00 h.p.
Dressing and cleaning	0.57 h.p.
Elevators, etc	0.13 h.p.
Friction and shafting	0.30 h.p.

Two small buhr mills in England, cited by Moore (1880, 442), used 1.77 and 2.3 horse-power respectively to *grind and dress* a bushel per hour.

At Sage's mill in Elkhart, Ind., 1888, Emerson found 3.5 horse-power used to *grind and dress* a bushel of wheat per hour (Emerson, 1894, 63).

Digitized by Google

The White & Beynon 6-run mill at Lanesboro, Minn., 1874, used 3.18 horse-power to *grind and dress* a bushel hour (Emerson, 1894, 64, 99.)

The St. Joseph 100-barrel mill at Mishawaka, Ind., 1884, used 93.35 horse-power, or 4.67 horse-power to *grind and dress* a bushel-hour. (Emerson, 1894, 64.)

The Eberhart 130-barrel mill, Mishawaka, 1884, used 114.08 horse-power or 4.39 horse-power per bushel-hour, while Miller's 175-barrel mill at the same place, used 185.72 horse-power, or 5.3 horse-power to *grind and dress* a bushel per hour. (Emerson, 1894, 65.)

Capt. W. H. Snyder, milling engineer, found that with a buhr stone 1 horse-power is needed to grind and 0.75 horse-power to operate the accompanying machinery, or 1.75 horse-power to *grind and dress* a bushel-hour.

Leffel's "Wheel Book" of 1877 gave the wheels and heads in nine small buhr mills, in various places, and either the wheat handled per hour or the flour made, from which it appears that they averaged 1.93 horse-power of wheels to *grind and dress* 1 bushel-hour.

The power required to grind and dress a bushel of wheat per hour in mills of various sizes in Russia is deduced from Kozmin's "Flour Milling," 1917, p. 577, to be about the same as in the United States, or as follows:

Bushels per Hour	Corresponding Bbls. of Flour per Day at 4½ Bush. per Bbl.	H.p. to Drive Mill.	H.p. per Bushel of Wheat per Hour.
15.3	77	40	2.61
76.5	385	157	2.05
153.0	770	290	1.90
229.5	1155	420	1.83
306.0	1540	550	1.80

Digitized by Google

The power to grind the wheat and operate the accompanying machinery in a buhr or in a roller mill varies from 1.6 *to* 2 *horse-power per bushel per hour.*

POWER TO DRIVE THE MACHINERY ACCOMPANYING BUHR STONES

Such accompanying machinery consisted of smutter,* and elevators, conveyors, hopper-boy or its equivalent cooler, bolts or reels, packer, etc. (Pallett, pp. 62, 64, 68, 70, 85). The power they consumed added to that needed for grinding constituted the total used by the mill.

The power used by the accompanying machinery per bushel of wheat per hour was:

0.75 h.p. per W. H. Snyder, milling engineer;
0.67 h.p. per L. G. West, experienced operator;
1.05–1.2 h.p. per H. J. Woolcott, experienced operator;
0.7 h.p. per Jas. Mizen, experienced miller;
.62–0.75 h.p. per Rich. Glynn, experienced miller;
0.50 h.p. per F. W. Ormsby, C.E., mill engineer;
0.7–0.75 h.p. per Jos. Himmel, experienced miller;
1.00 h.p. per Molesworth.

The total power used to grind a bushel of wheat per hour and convert it into flour may be divided as follows:

Grinding, Per Cent.	Accompanying Machinery, Per Cent.	Authority.
50	50	Molesworth
75	25	West; Ormsby
65	35	Woolcott
60	40	Mizen
67	33	Holliwell
67	33	Glynn
62.5	37.5	Himmel
64	36	Hill
57	43	Snyder

* Smut machine was in use at Janius, N. Y., in 1810 (Clinton).

Digitized by Google

SPEED OF MILL STONES

An early speed rule was, R.P.M. = 500 ÷ diameter of the stone in feet. Thus a 4.5-foot stone would operate, by this rule, at 111 R.P.M., a speed prevailing before 1795.

Haswell (1878, p. 556), allowed 2000 feet per minute for the speed of the rim of the stone, which corresponds to 141 R.P.M. for a 4.5-foot stone. The Noye Mfg. Co. allowed 2500 feet per minute, corresponding to 177 R.P.M. for a 4.5-foot stone.

Gump's old "Mill Book" gave 350 R.P.M. for a 3-foot stone, or 3300 feet per minute.

The table on page 16 is a summary of the speeds of mill stones at sundry dates, as given by various writers and millmen.

Studying this speed table it is to be noted that sometimes the same author gives widely different speed for a particular stone, such as 92 to 160 R.P.M. for a 4.5-foot stone by Pallett. No doubt such ranges obtained in practice at all times, especially as be tween grist and merchant mills. *The country grist mills usually operated at slow speeds, while the merchant mills speeded up for volume of output, thereby using greater power.*

Necessarily the power per run varied with the speed and work done. A small stone at high speed would grind as much or more wheat than a larger, slow-speed stone.

The earliest literature relating to the power variations with stones of different sizes is found in Evans' trea-

Digitized by Google

SPEEDS OF MILL STONES

Stone.	Year.	Authority.	R.P.M.	Stone.	Year.	Authority.	R.P.M.
96″	1795	Evans*	60	54″	1854	Haswell*	130
90	1806	Gregory	60	54	1860	Snyder*	180–200
84	1795	Evans*	69.4	54	1866	Pallett*	150–160
82	1795	Evans*	71	54	1866	Pallett*	92–97
72	1795	Evans*	81–95	54	1868	Glynn*	165–170
72	1795	Banks	100	54	1870	Mizen*	160–180
72	1804	Gray	60	54	1870	Holliwell	140
72	1806	Gregory	60	54	1878	Haswell*	143
72	1826	Nicholson	60	54	1879	Moore	105
72	1832	Jones*	81	54	1880	West*	160
72	1880	Ormsby*	130	54	1880	Ormsby*	180
70	1879	Moore	70	54	1887	Rechard*	160
66	1795	Evans*	88	54	....	Nordyke*	185
66	1880	Ormsby*	145	51	1795	Evans*	125
64	1795	Evans*	113	51	1879	Moore	110
60	1754	Fenwick	90	48	1795	Evans*	121½
60	1795	Banks	100	48	1795	Ellicott*	106
60	1795	Evans*	97–114	48	1851	Byrne	125
60	1795	Ellicott*	88	48	1852	Templeton	125
60	1806	Gregory	90	48	1854	Tomlinson	100
60	1826	Nicholson	90	48	1865	Nystron*	120
60	1832	Jones*	97–100	48	1866	Pallett*	180–190
60	1842	Grier	90	48	1871	Wait*	140
60	1851	Byrne	90–100	48	1878	Haswell*	151
60	1852	Templeton	100	48	1879	Moore	120
60	1879	Moore	90	48	1880	Woolcott*	160–200
60	1880	Ormsby*	160	48	1880	West*	160
60	1894	Emerson*	145	48	1880	Ormsby*	200
60	....	Nordyke*	175	48	1880	Molesworth	130–140
58	1795	Evans*	105	48	1887	Rechard*	180
56	1795	Evans*	116–122	48	....	Munson*	190
54	1754	Fenwick	100	48	....	Nordyke*	195
54	1795	Evans*	104–108	48	....	Babcock*	180–200
54	1795	Ellicott*	97	48	1913	Oliver*	150–200
54	1806	Gregory	100	42	1795	Evans*	138.8
54	1827	Jamison	120	42	1887	Rechard*	200
54	1832	Jones*	108	42	....	Nordyke*	240
54	1851	Hughes*	150–160	36	1866	Pallett*	230–240
54	1851	Hughes*	175–180	36	1880	Ormsby*	265
54	1851	Hughes*	168	36	1887	Rechard*	230–240
54	1851	Byrne	111	36	....	Nordyke*	300
54	1851	Templeton	111				

* The American writers are marked.

Digitized by Google

tise (1795, Part I, p. 121), in which he theoretically deduced that this range might be:

3.5-foot stone	58 per cent
4-foot stone	78 per cent
4.5-foot stone	100 per cent
5-foot stone	125 per cent
5.5-foot stone	153 per cent
6-foot stone	183 per cent
6.5-foot stone	219 per cent
7-foot stone	252 per cent

F. W. Ormsby, C.E., testified in court that a 5-foot stone would use about 19 per cent more power than a 4.5-foot one, provided the stones were speeded by the rule of 2500 feet rim speed per minute, generally in use before 1880 and later.

Hughes (1851, p. 55) and Pallett (1866, p. 227) make a 4.5-foot stone use 12 per cent more power than a 4-foot.

BUSHELS OF WHEAT GROUND PER HOUR PER RUN OF STONES

The literature upon this subject is not only voluminous but widely and wildly variable.

In 1806 Brewster gave his rule, stating he had found that ". . . *the quantity of flour ground per hour, in pounds avoirdupois, will be equal to the product of the square of the mill stone's radius, and the number* 125" (Brewster's "Ferguson," II, 165–6).

From this 1806 rule is computed the grinding capacities per run for various sizes of stones as follows:

Digitized by Google

Diameter of Stone, Feet.	Flour Ground per Hour.		Bushels of Wheat per Hour at 5 to the Barrel.	Barrels Flour per 24 Hours.
	Pounds.	Barrels.		
4	500	2.55	12.75	61.2
4.5	633	3.23	16.15	87.5
5	781	3.98	19.90	95.5

No old merchant miller, experienced with buhr mill practice, or the history of milling, will question the grinding possibilities of this Brewster rule of 1806, provided the plant had adequate power. The rule is confirmed by the practice of 1830 to 1880 in the buhr milling centers of the United States.

The Oswego mills ground 100 barrels of flour per run per day or from 18 to 20 bushels per hour. The stones were generally 4.5-foot at 170 to 180 R.P.M.

In 1858 the 88 runs of stones in Oswego used *over* 50,000 bushels of wheat daily, or over 18.6 bushels per run per hour.

The following tabulation shows the variations in wheat grinding per run of 4.5-foot stones per hour:

Year.	Bushel, Hour.	R.P.M.	Authority.	Year.	Bushel, Hour.	R.P.M.	Authority.
1795	3.5	108.1	Evans	1866	10–15	150–160	Pallett
1806	16.2	.....	Brewster	1868	18–20	160–170	Himmel
1847	16	.....	Churchill	1870	12	.....	Williams
1848	18–20	.....	Clark	1870	18–20	160–180	Mizen
1850	18–20	.....	Churchill	1870	8	.....	Craik
1851	6–14	97–180	Hughes	1877	18–20	.....	Johnson
1851	16–18	.....	Hancock	1879	3.67	105	Moore
1854	8.3	130	Haswell	1880	17–20	180	Ormsby
1857	17–20	.....	Hancock	1880	10	160–180	Woolcott
1859	18–20	.....	French	1881	5	105	Bookwalter
1860	20	200	Snyder	1888	4	100	Glynn

Digitized by Google

HISTORY OF BUHR STONE MILLING IN OSWEGO, N. Y.

"A small *grist* and saw mill were built by Froman & Brockett, at the falls, in 1809" in Oswego (Clark's "Onondaga," II, 387).

There was a *grist* mill in Oswego in 1824 (Spafford's "Gazetteer of the State of N. Y.").

"In 1830 . . . two *flouring* mills with 6 runs of stone each were in operation, and a third was in progress of construction" in Oswego (Churchill).

In 1834 the mills aggregated 29 runs of stones (Churchill's "Landmarks," pp. 366, 368).

In 1836 there were "six very large *merchant* grist mills" in Oswego (Gordon's "Gazet. of State of N. Y.").

By 1842 Oswego had "7 extensive *flouring* mills containing 47 runs of stones" (Disturnell's "Gazet. of the State of N. Y.," p. 308).

"In 1847–8 Moses Merrick & Co. built what was known as the Seneca Mills . . . 4 miles south of Oswego. The mill contained 15 runs of stone with a daily capacity of 1200 barrels, at that time the largest in the United States. It burned in 1864 (Churchill's "Landmarks," p. 372).

Clark's "Onondaga," of 1849, II, 391, states that "Wonderful improvements have been made within the last few years, in the construction of mills, at Oswego, and a single run of stone will turn out 100 to 150 barrels daily. Many of the improved mills, have a separate water wheel for every run, which expedites the process of manufacturing flour, beyond anything of former invention.

Digitized by Google

"Considerable additions have been made to the Oswego *flouring* mills during the past year (i.e., 1848). The mill of Henry Wright . . . is capable of manufacturing 400 barrels of superfine flour daily, and his machines for cleaning, screening and separating impurities, are decided improvements upon any hitherto in use. The new mill of Messrs. Mills, Whitney & Co., up the river, has 5 runs of stone. . . Messrs. Merrick, Davis & Co., have just put in operation a new improved mill, with 8 run of stone, capable of manufacturing 800 barrels of flour daily."

At Oswego in 1850 were a total of 18 mills, having 88 runs of stones and a daily capacity of 8750 barrels of flour. (Churchill's "Landmarks," pp. 372–3).

By 1852 Oswego had 16 mills with 82 runs of stones and a daily capacity of 7420 barrels of flour (Knorr and Hancock's "Oswego Directory and Compendium of Useful Information" 1852, pp. 41 et seq.).

In 1857 Oswego had a total of 16 mills and 86 runs of stone with a capacity of 8400 barrels per day (Hancock's "Oswego Directory," 1857, p. 21).

In 1858 Oswego had 16 mills with a total of 88 runs and a daily capacity of 8800 barrels of flour. "Add to these the 5 mills up the river, within 10 miles of the city, and we have an aggregate of 112 run of stone, which require, when running at their full extent, *over* 50,000 bushels of wheat per day" ("Commercial Times' 2d Annual Review of the Trade and Commerce of Oswego for 1858," p. 5).

French's "Gazetteer of the State of N. Y.," 1860, p. 525: "The Oswego Mills, 18 in number, with an aggregate of

Digitized by Google

100 run of stone, are capable of grinding and packing 10,000 barrels of flour daily."

In 1870 there were 14 mills in Oswego aggregating 73 runs, and 6 at Fulton, 9 miles up the river, with 34 runs, making a total of 107 runs of stones in the vicinity (Churchill, p. 383).

In 1877 there were 13 mills, aggregating 80 runs and a daily capacity of about 6610 barrels (Johnson's "History of Oswego Co., 1877, pp. 171–2).

This digest of the history of milling in Oswego shows that the capacity of a run of stones from 1830 to 1880 was from 85 to 100 barrels. The mills generally operated 4.5-foot stones at speeds from 170 to 180 R.P.M. Each stone was driven by a separate wheel, while the accompanying machinery had its own wheel or wheels.

POWER PER 100 BARRELS OF FLOUR PER 24 HOURS IN BUHR, IN COMBINED BUHR AND ROLLER, AND IN ROLLER MERCHANT MILLS

Enough has been given as to the flouring art in Oswego, in its thriving days (1830–1880), as a merchant buhr-milling center, to show that a run of 4.5-foot stones, operated at from 170 to 180 R.P.M., *ground and dressed* from 18 to 20 bushels of wheat per hour, and produced 100 barrels of flour per twenty-four hours, at a power expenditure varying from 30 to 40 horse-power, dependent upon the conditions at, and size of the particular mill.

The following table shows details as to some of the mills as disclosed by the testimony in court of millers operating them:

Digitized by Google

Authority.	Year.	Stones, Feet.	Wheat per Hour, Bushels.	Barrels Flour 24 Hrs.	Power, Total Horse-power.	Power per Run, Horse-power.	Power per 100 Barrels, 24 Hrs. Horse-power.
Caseo.....	1860	5–4	.....	400	126	25.2	31.5
Short.....	1864	4–4.67	.....	400	152	38	38
Himmel.....	1864	5–4.5	100	500	190	38	38
Glynn*.....	1865	7–4.5	.....	600	225	37.5	37.5
Mizen.....	1870	6–4.5	115	600	210	35	35

* The mill had bolting capacity for but 6 stones.

Millwright W. S. Morse, who constructed and overhauled many of the large mills of the Oswego Valley, and elsewhere in New York, from and after 1859, testified that it was necessary to proportion the mills by the rule that it took 20 horse-power per run to grind the wheat and about a like amount for other uses. He stated that a 5-run mill would use 100 horse-power in grinding, 40 horse-power for smutting, and 60 horse-power for elevators, conveyors, bolting, etc., or 200 horse-power total, or 40 horse-power per run.

Millwright W. H. Bullock testified that the rule among the trade in various states was that 1 horse-power would make 2.5 barrels of flour in twenty-four hours, or a 100-barrel mill would use 40 horse-power.

Frederick O. Clark was connected with the Oswego milling industry as an operator from 1852 to 1892. He testified that the mills had a product of 100 barrels of flour in twenty-four hours per run, and that this was the capacity of a run of stones generally recognized at that place.

A compilation made from old wheel books of turbine manufacturers, in which were given the wheel installations

Digitized by Google

and the heads, and the product in barrels of flour per day, covering the years 1881 to 1890 for 28 mills, with a total production of 23,990 barrels per day, and 8475 horse-power of wheels, gave an average of 35.3 horse-power per 100 barrels per twenty-four hours. The mills were in the middle west, and were both roller and combination of roller and buhr mills.

Jno. W. Hill, C.E., tested the Freeman steam mill at LaCrosse, Wis., in March, 1879. It had a combination of rolls and buhrs for grinding. Flour was made at the rate of 531 barrels in twenty-four hours by developing 270.56 horse-power in the engine, or 51 horse-power per 100 barrels daily. The grinding took 64 per cent of the power.

James Emerson, hydraulic engineer, measured the water power in 3 mills at Mishawaka, Ind., in 1884 and found:

Eberhart's mill, 130 bbls., 114.08 h.p. or 87.7 h.p. per 100 bbls., 24 hrs.
Millers' mill, 175 bbls., 185.72 h.p. or 106.1 h.p. per 100 bbls., 24 hrs.
St. Joseph's mill, 100 bbls., 93.35 h.p. or 93.3 h.p. per 100 bbls., 24 hrs.

The following table is deduced from p. 578 of Kozmin's "Flour Milling" of 1917, and gives the power used in Russia per 100 barrels of flour per twenty-four hours with various systems of milling:

Systems of Milling.	Power per 100 Bbls. in 24 Hrs.
Grinding only—a whole wheat product	20.91 h.p.
Grinding and scouring—a whole wheat product	24.55 h.p.
Breaking, grinding and scouring—a whole wheat product	27.27 h.p.
Breaking, grinding, scouring and bolting	31.82 h.p.
Breaking, grinding, scouring, bolting and sifting	36.36 h.p.
Breaking, grinding, scouring, bolting, sifting and dressing	45.45
Long system of gradual reduction including scouring, bolting, sifting and dressing	50.00 h.p.

Digitized by Google

In this connection 100 Russian poods equal 90 pounds avoirdupois (Cent. Dict.).

The Author has made tests of steam roller mills, measuring the power at five-minute intervals for the day in each case, with the following results:

Hoffer Mill, Steelton, Pa.,	Dec., 1904,	1000 bbls. day,	360 h.p.	36 h.p. per 100 bbls.
Hoffer Mill, Steelton, Pa.,	Feb., 1905,	1100	380	34.5
Hoffer Mill, Steelton, Pa.,	Nov., 1905,	1374	434	31.6
Quaker City, Phila., Pa.,	Apr., 1905	800	271	33.9
Quaker City, Phila., Pa.,	Oct., 1905,	800	276	34.5
Millbourne, Phila., Pa.,	Jan., 1911,	1246	398	31.9
Paxton Mill, Steelton, Pa.,	Jan., 1901,	950	354	37.2
Paxton Mill, Steelton, Pa.,	May, 1902,	1000	357	35.7

At the Millbourne Roller Mills, Philadelphia, grinding 1250 barrels of winter wheat flour, 38.1 horse-power were used per 100 barrels per day; and when grinding 987 barrels of flour, 489 barrels made from rye and the balance from spring wheat, 50.5 horse-power were used per 100 barrels per day (Whitham's tests, 1918).

The Author collected data from 16 roller mills with capacities ranging from 25 to 80 barrels and averaging 52 barrels per day. They produced at the rate of 72 horse-power per 100 barrels per twenty-four hours.

A 100-barrel roller merchant mill at Xenia, O., used 55 horse-power.

A 125-barrel roller merchant mill at Mouston, O., used 60 horse-power or 48 horse-power per 100 barrels, twenty-four hours.

A 300-barrel roller merchant mill at Warren, Ill., used 145 horse-power or 48 horse-power per 100 barrels, twenty-four hours.

J. R. Thomas, of Richmond, Va., an old, experienced miller, gives 30 horse-power on the line shaft of the buhr

Digitized by Google

or roller mill, as needed and used in making 100 barrels per twenty-four hours, as a minimum, and 32 horse-power as a maximum. To this should be added the loss of power between the water wheels or engine and the line shaft. This power applies only to large mills, small mills using more per 100 barrels.

J. W. Flaherty, late President of the Va. Millers' Asso., an old, experienced miller at Lynchburg and Danville, finds that from 32 to 33 horse-power on the line shaft are needed per 100 barrels of flour per day in large buhr and also in large roller mills. To this should be added the friction of the main drive.

A. F. Ordway, Beaver Dam, Wis., born in 1833, is an experienced millwright and mill engineer. His experience began in Vermont and was continued after he went to Wisconsin in 1857. His work has covered parts of five states in the Middle West. He states that, in a buhr mill, from 4.5 to 4.75 bushels of wheat made a barrel of flour; that a 4.5-foot stone ground 20 bushels per hour in a merchant mill using 25 horse-power; that the accompanying machinery used 15 horse-power per run; and that 40 horse-power was used per run, producing 100 barrels per day.

Holliwell (p. 271) makes a 10 "sack" mill use from 70 to 80 horse-power of which two-thirds is consumed by the rolls and one-third by the cleaning machinery, etc. He adds that it is "not far wrong to say that 10 horse-power per sack is used in well-designed roller mills of which one-half is wanted for the rolls." He finds that sometimes it takes 12 horse-power or more per "sack." Since 1870 (per Cent. Dict.) a "sack" in England has been 4 Imperial or 4.125 Winchester or U. S. bushels. Accordingly, a 10

Digitized by Google

sack mill uses 41.25 U. S. bushels per hour, which divided by 4.7 bushels to the barrel of flour (Holliwell, p. 244), corresponds to 8.77 barrels per hour, or 210 barrels per twenty-four hours. Since he makes this mill use from 70 to 80 horse-power, he gives from 33.3 to 38.1 horse-power per 100 barrels per day. Taking the 10 horse-power per sack or 4.125 U. S. bushels, Holliwell makes the grinding and dressing of a bushel per hour to be 2.42 horse-power. He further gives 12 horse-power or more as often used per sack, corresponding to 2.9 horse-power per bushel per hour, as representing English practice in roller mills.

At Dayton, Ohio (Part 2, p. 465, of 10 U. S. Census," 1880), are water powers leased as "runs of water" and defined as 233.3 cubic foot per minute under 15 feet head. This amounts to 6.625 gross horse-power, or 5.3 horse power with wheels of 80 per cent efficiency.

A judgment entered on Nov. 6, 1875 in the case of *Cummings v. Carrington*, in the Supreme Court of Oswego Co., N. Y. decreed that a run of stones and accompanying machinery on the Varick canal in Oswego meant:

2000 cubic feet minute for mills with	10-foot head.
1900	10.5
1800	11
1700	12
1500	13

The waters, under the heads named, will give an average of 30.25 net horse-power per run of stones when using 80 per cent wheels, or 37.75 gross horse-power. The mills on this canal produced from 85 to 100 barrels per run per day, using 4.5-foot stones, at 170 to 180 R.P.M. The rights,

Digitized by Google

adjudicated in 1875, were granted at sundry times from 1826 to 1860. At the hearings, men operating buhr mills on this canal gave evidence as to the water actually used, the power developed, and the flour production. Any controversy was referred to the then existing and operating mill at the place for settlement.

Capt. W. H. Snyder, Milling Engineer, Batavia, N. Y., born in 1838 and experienced with the systems of buhr-stone milling in the United States, Canada, England, Scotland and Ireland, gives the following information relative thereto under date of March 17, 1917:

A run of 4.5-foot buhr stones in 1850 to 1860 in a merchant mill operated at from 180 to 200 R.P.M.; used 4.33 bushels of winter, and sometimes as low as 4.27 of hard spring wheats per barrel of flour, ground as much as 20 bushels of wheat per hour, made as much as 110.75 barrels of flour per day; and used 20 horse-power for grinding and 15 horse-power for the accompanying machinery, or 35 horse-power per run.

Kozmin's "Flour Milling," translated from the Russian in 1917, shows (p. 577) the power used in cleaning, grinding and dressing certain quantities of wheat per 24 hrs. Assuming $4\frac{3}{4}$ bushels of wheat to the barrel of flour, the power required is

77	bbl. mill	40	h.p.	or	53.2	h.p. per	100 bbls. daily.
385	"	157	"		40.8	"	"
770	"	290	"		37.7	"	"
1155	"	420	"		36.4	"	"
1540	"	550	"		35.7	"	"

The Russian and American power demands per 100 barrels are nearly identical.

Digitized by Google

POWER PER RUN OF STONES, INCLUDING ITS ACCOMPANYING MACHINERY, IN MERCHANT AND GRIST MILLS

Enough has been given to show that from 30 to 40 horse-power was used in Oswego to drive a run of stones and its accompanying machinery when that city was a flouring center from 1830 to 1880. Also it has been shown that such powers were used and required elsewhere to grind as much wheat per hour per run or to produce a like output per day. It has just been shown that the court, in the case of the Varick canal in that city, confirmed the conclusions given as to water and power needs and uses per run.

On the opposite side of the river, in Oswego, is another Power Company operating the Hydraulic Canal. It has leased water sufficient to drive a run of stones and its accompanying machinery at sundry times. The leases outstanding and made for a period of nine hundred and ninety-nine years, and *defined in runs of stones,** are as tabulated on page 29.

The grants defining the water per run by particular wheels, limited the amounts to the life time of the wheels after which some undefined adjustment is to be made. Turbine wheels installed in 1848 and 1850 in Holyoke are in active service to-day. The life of a wheel is like that of a clock. If repairs and renewals of parts are kept up, the life is great, and probably longer than for that steam pumping-engine in England which has operated for one

* The leases do not specify the diameter or speed of the stones. Only one lease speaks of the stone in connection with a flouring mill. The leases do not require the water to be used for milling or for any other specific purpose.

Digitized by Google

RUNS OF STONES LEASED FROM THE HYDRAULIC CANAL IN OSWEGO

Year.	Grantee.	No. Runs.	Class of Water.	Heads on Property, Feet.	Water in Cu.ft. sec. per Run as Defined in Lease.	Gross H.p. per Run.	Net H.p. per Run for 80% Wheel.
1826	Bronson & Morgan	4	1st class.....	17.74	11.75	23.68	18.94
1827	Brown.....	1	Unconditional	17.14	Not defined		
1828	Hurlbut.....	1	do	13.04	do		
1828	Fitzhugh.....	3	1st class	17.74	11.75	23.68	18.94
1830	Brown.....	1	do	17.74	11.75	23.68	18.94
1830	Cole.....	4	do	17.74	Not defined		
1831	Burkle.....	1	do	17.74	do		
1833	Oswego Cotton Co.	4	Unconditional	16.60	do		
1833	Lawrence.....	3	2d class	17.74	do		
1835	Eno.....	3	Unconditional	13.55	do		
1843	Ames.....	2	1st & 2d class	17.74	do		
1844	Doolittle.....	4	1st class	17.74	do		
1846	Cochrane.....	1	Unconditional	13.35	do		
1846	Leib.....	1.5	Surplus	13.04	do		
1857	Ames.....	1	do	17.14	11.75	22.88	18.30
1875	Hubbard & North.	.5	do	13.04	11.75	16.67	13.33
1881	Pardee.....	1	do	17.19	13.5	26.37	21.10
1883	Post & Henderson.	1	do	17.14	Not defined		
1883	Shade Cloth Co...	5	2d surplus	16.60	do		
1885	Condé.....	2	Surplus	16.60	40-in. Risdon D.C. wheel for 2 runs or 38.58 cfs. per run.	72.75	58.20
1888	Condé..... ...	4.5	do	16.60	48-in. Hercules wheel for 4.5 runs or 34.64 cfs. per run.	65.12	52.12
1889	Gordon.....	2	do	11.08	One No. 9 Leffel wheel or 24.4 c.f.s. per run.	33.84	27.15
1890	Condé.....	1	do	12.25	One 39-in. Hercules wheel or 90.2 c.f.s. per run.	126.00	100.80
1890	Shade Cloth Co...	1	2d surplus	16.60	Not defined		

hundred years, and is yet in service ("Compressed Air," XXII, No. 7, July, 1917.)

On this canal in Oswego are grants ranging from 16.67 to 126 gross horse-power per run. Many of the lessees operated flour mills for more than a generation, producing

Digitized by Google

from 85 to 100 barrels of flour daily per run of stones. Every lessee has and had wheels largely in excess of the power given by 11.75 cubic feet second per run. A run of stones on this particular canal has never been determined by a court, and the doctrine of practical location or construction must control should a finding be made. Wheels installed, regardless of their wastefulness or type, will, after a long lapse of time, form by their use, the measures and limitations of the grant. As to the test of practical construction or interpretation, consult:

Jacquin vs. Boutard, 89 *Hun*, 437 *affirmed* 157 *N. Y.*, 686.
Chicago vs. Sheldon, 9 *Wall*, 50, 54.
Topliff vs. Topliff, 122 *U. S.*, 121, 131.
Ins. Co. vs. Dutcher, 95 *U. S.*, 273.
Hatch vs. Dwight, 17 *Mass.*, 299.
Woolsey vs. Funke, 121 *N. Y.*, 87, 92.
Dodge vs. Zimmer, 110 *N. Y.*, 48.
Nicholl vs. Sands, 131 *N. Y.*, 24.
Sattler vs. Hallock, 160 *N. Y.*, 291, 30
Seymour vs. Warren, 179 *N. Y.*, 1, 6.
Wimme vs. Mehrbach (3*d Dept.*), 130 *App. Div.* (*N. Y.*), 329, 331.
French vs. Carhardt, 1 *N. Y.*, 96–102.
Bridger vs. Pierson, 45 *N. Y.*, 601, 604.

"Now, it has been often held that the practical construction put upon a contract by the parties to it is sometimes almost conclusive as to its meaning, for there is no surer way to find out what parties mean than to see what they have done" (89 *Hun*, 437).

"If this contract is to be regarded as somewhat indefinite or ambiguous, we may resort to the surrounding facts and

Digitized by Google

circumstances as they existed when it was made to aid us in its interpretation and also consider the practical construction which the parties have given it. Its interpretation by them is a consideration of importance" (160 *N. Y.*, 291).

The latest and most conclusive decision in determining that the doctrine of practical construction holds for water rights grants is the case of the *Carthage Tissue Paper Mills vs. Carthage*, 200 *N. Y.*, 1, which follows along the line marked out in *Groat vs. Moak*, 94 *N. Y.*, 115.

"Practical construction by uniform and unquestioned practice from the outset, especially when continued for a long period of time, is entitled to great if not controlling weight for it shows how the parties who made the contract, understood it; if they did not know what they meant, who can know?"

"When the parties (193 *N. Y.*, 543, 548) to a contract of doubtful meaning, guided by self-interest, enforce it for a long time by consistent and uniform course of conduct, so as to give the practical meaning, the courts will treat it as having that meaning even if as an original proposition they might have given it a different meaning."

"The lack of practical knowledge of hydraulics a generation since caused a looseness in contracts pertaining to milling matters that has been productive of an immense amount of vexatious and expensive litigations. It is only necessary to glance at the methods adopted by the various Water Power Companies of the country for determining the quantity of water leased—to learn that there has been no generally recognized standard for such measurements even among those claiming to be engineers and experts

Digitized by Google

in such matters; it would seem that the average boy, ten years of age, who has ever played with toy water wheels would be able to provide something more definite than the Oswego plan" (*Emerson*, 1878, p. 18).

Nine miles up the river from Oswego is Fulton, which had several large flour mills equipped with buhrs. Many of the water grants were for water sufficient to economically operate a run of stones and its accompanying machinery in the most approved manner. In the case of *Wm. G. Gage vs. DeWitt Gardner and Others*, the Decree of the Supreme Court of Oswego Co., N. Y. in 1891 was that a run as granted was "140 inches of water under a 12-foot head." This means 27 cubic feet per second under a 12-foot head, or 36.8 gross horse-power, or 29.47 net horse-power with wheels 80 per cent efficient (see article on "Inches of Water").

The Decree in the case of *Henry Rodee et al. vs. City of Ogdensburg, et al.*, in the Supreme Court of St. Lawrence Co., N. Y., 1872, found

"That the quantity of water which constitutes a *run of water* . . . , being such quantity as was sufficient with the most approved wheels and water saving machinery to propel a run of stone with the necessary bolts and machinery of a *flouring* mill, at the time said conveyances were executed, is 25 cubic feet per second when the fall is 9 feet, or enough to produce an equivalent power when the fall is more or less—the said quantity being nearly equal to 25 horse-power, and said quantity is the amount hereinafter specified as the standard quantity per run" (*p. 279 of Printed Record*).

Note that 25 cubic feet second on 9-foot head is actually

Digitized by Google

25.57 gross horse-power. The 25 horse-power mentioned in the decree is gross, not net horse-power, and 80 per cent wheel efficiency the power is 20.46 horse-power. On page 218 of the "Printed Record" in that case, one run of water for a "Toll or custom *grist* is given as 25 horse-power, or the same as already noted for a "*flouring* mill." That is, the Decree made a grist mill use as much water and power as a merchant mill. It will appear later that, from the earliest times, the merchant mill has used the greater power.

In the case of *Watts T. Loomis vs. Henry Cheney Hammer Co. and Others, Judgment April* 22, 1893, *in Supreme Court of Herkimer Co., N. Y.*, the court decreed that:

Thirty-six cubic feet second constituted 3 runs of stones on lot 3; 32 constituted 4 runs on lot 9; and 36 cubic feet second supplied 4 runs on lot 8. No mention was made of the heads, which were about 10.5 feet on lot 3, 14.5 on lot 8 and 16 feet on lot 9, as *assumed* for 1836.

It seems that the various water power owners agreed, in 1887, to have Attorney Charles Rhodes, Agent of the Oswego Hydraulic Canal Co. (who laid claim to being an engineer), examine their titles and determine the proportion of the half flow of the Mohawk river at Little Falls, to which they were entitled. In Rhodes' report he endeavored also to designate the extent of each right as measured in cubic feet per second. His determinations were, without opposition, embodied in the decree of 1893, as above recited. The original grants for lots 3, 9 and 8 were made in 1836. The remainder of the half river was divided into seventeen parts and these three lots were only a part of the grants. Rhodes reported that Oliver Evans' book was the standard of 1836 (although Evans had been

Digitized by Google

dead seventeen years at the time of the grants, and had written his book on milling in 1795, or forty-one years earlier), that Evans made a run 10 horse-power, which Rhodes said would be obtained with overshot or breast wheels, of 70 per cent efficiency, under the heads as before given, which heads he took from *hearsay*. Rhodes in these 1887 studies had no power to call witnesses or administer an oath. He was influential, if not controlling, in determining the meaning of a run of stone on the Varick canal as decreed in 1875 (see page 26) to be water enough to give 37.75 gross horse-power for grants of from 1828 to 1860, or 30.25 net horse-power with 80 per cent turbines.

Rhodes in 1885 to 1890 was the agent who made the Oswego leases with Condé and Gordon for a total of 9.5 runs of stones (see page 29) permitting in the lease certain turbines to be used to measure the grants, and conveying water represented by from 33.84 to 126 gross horse-power per run. Can it be that a run is only 10 horse-power in Little Falls and from 30 to 100 horse-power in Oswego—as determined by the same man? Rhodes called the efficiency of overshot and breast wheels the same, or 70 per cent which is an error.

Note further that Evans nowhere mentioned the term horse-power in his book nor gave the percentage of efficiency of any water wheel, nor the net power used for any purpose. This Little Falls decree was made simply to proportion the variable half river flow among the different owners, so that they could bear their several parts of the upkeep of the dam and bulkheads and power canal, and *not to determine or measure a run of stones.*

On the Saranac river in Plattsburg, N. Y., were divided

Digitized by Google

water interests dated 1829. These were determined in *Hartwell & Winslow vs. Mutual Life Ins. Co., in the Supreme Court of Clinton Co. in* 1884.

On the trial a mass of expert testimony was introduced by engineers, millwrights and millers, as well as evidence as to the use of water in the past. The court found that the water for 8 runs of stones was 259.463 cubic feet second. In one part of the decision a head of 11 feet 8 inches was mentioned.

The decision was reversed on appeal (50 *Hun*, 497), and a second decision rendered. The final decree was that 8 runs are measured by 233.517 cubic feet second, without the head being mentioned. In the trial the head was shown to be 13 feet, *which is the head now actually in use at the mills.*

The first Plattsburg decree gave, for the 1829 grant, 259.463 cubic feet seconds when the head had been taken as 11 feet 8 inches down to the centers of the tub wheel runners. The centers of the throats for the tub wheels were 10.5 inches above the centers of the runners, and the court thought the referee erred in taking the larger head. The court also ruled that some coefficient of discharge other than 100 per cent should probably have been applied.

The spouting velocity for a head of 11 feet 8 inches is 27.405 feet per second, and for 10 feet 9.5 inches, it is 26.362.

Accordingly the aggregate throat areas for the spouts of the tub wheels were 9.467 square feet, as is found from

$$Q = 259.463 = A \times 27.405.$$

The referee in his second report (which was accepted by

Digitized by Google

all parties) found for the 8 runs a total of 233.517 cubic feet per second. Taking the reduced head, it appears that the referee used for his final report a discharge coefficient for the tub wheels of about 94 per cent as is deduced from the following equation:

$$Q = 233.517 = 9.467 \times \text{coefficient} \times 26.362$$

It is to be noted that the court's decision is based on use, and the doctrine of practical location, also that " the quantity to which the plaintiffs are now entitled is the same as it was then (i.e., in 1829) . . . We think the plaintiffs . . . are not obliged to reduce the quantity because improved modern appliances can give equal efficiency (i.e., net power) to a much smaller volume of water."

The 233.517 cubic feet seconds on 10 feet 9.5 inches head, and 35 per cent efficiency for tub wheels give 100.2 net horse-power, or 12.5 horse-power per run.

It is a matter of interest that 259.463 cubic feet second under 11 feet 8 inches head is the same in power as 233.517 cubic feet second under 13 feet head, each being a total of 344 gross horse-power for the 8 runs, or 43 gross horse-power per run of stones. This gives 34.4 net horse-power at 80 per cent wheel efficiency.

One of the most interesting cases on divided water interest, and the doctrine of practical construction, is known as the *Carthage Tissue Paper Mills vs. Village of Carthage and Others*, 200 *N. Y.*, 1.

The hearings were held in 1904. Among the many grants and decrees were the following relating to grist mills:

Digitized by Google

Date.	Water Right.	Court's Finding.
1830	". . . Sufficient water to carry saw for a saw mill, or 3 *pairs of grinding stones.*"	800 in. of water
1860	"Right for an *ordinary grist mill* with 4 runs of stones"	1000 in. of water
1866	"Right for a *common country grist mill* with 5 runs of stones, constructed in the most approved principles to save water"	1100 in. of water

The decree did not mention the head of water. The testimony varied as to the head which was measured, during the hearings, to be about 9 feet. It will later be shown that when a grant of water is made in *inches of aperture*, then an opening of the square inches named is meant, and the orifice must be " standard," i.e., constructed with sharp, square edges and without ajutage effect. But when a grant is made of *inches of water* it is measured by the theoretical discharge through an opening of the area in square inches named, and under the existing head.

Upon this basis the Tissue Paper case found for grist mills:

Date.	Ins. of Water per Run.	Cu.ft. sec.	Gross H.p. per Run, 9 Ft. Head.	Net H.p. with 80 Per Cent Wheels.
1830	266.67	44.4	45.4	36.3
1860	250	41.7	42.6	33.1
1866	220	36.7	37.5	30.0

No doubt the court had the improvements in the efficiency of water wheels in mind, as between 1830 and 1866, when determining the inches of water per run of stones in a *common country grist mill*, and was also aware that the

Digitized by Google

efficiencies were below 80 per cent, and the net power per run was less than here computed with that percentage.

In *Powers vs. Perkins*, 132 Mich., 33, "Complainant built a water power canal, the power of which was placed at 66 runs of stones, or 990 horse-power . . . " This is 15 horse-power per run.

Leffel's 1877 Wheel Book contains sizes of wheels and heads for 269 *grist* mills in 22 states of this country, with an aggregate of 488 runs of stones (or an average of 1.8 runs per mill), and an average installation of 15.4 horse-power per run.

Pache's grist mill at Glenora, N. Y., built in 1833, operates three runs of $4\frac{1}{2}$-foot stones and accompanying machinery on wheat, buckwheat and corn or feed, respectively. It was operated up to 1874 by a 24-foot overshot wheel, 12 feet wide, 8-inch buckets, and about 4-foot head, producing about 85 horse-power. It was replaced by an 8-inch Munson turbine under 124-foot head and rated at 69 horse-power. Transmission losses of about 16 horse-power were eliminated by the use of the turbine and the substitution of belts and more direct drives for spur gearing and a system of jack shafting. The overshot made about $7\frac{1}{2}$ R.P.M. as compared with 1400 by the turbine.

This grist mill has one of Evans' hopper-boys which has not been used for forty years or longer. Its four-sided revolving screen is eighty-five years old. Other mechanisms have been in use for from forty to sixty years. Its Harris smutter is seventy years old.

The stones turn at 125 R.P.M. The wheat stone grinds from 8 to 10 bushels per hour and produces from 40 to 50 barrels of flour per twenty-four hours. The full power of

Digitized by Google

the turbine is required for the operation of the three runs, each of which uses about the same power (Whitham, 1918).

Haswell, evidently referring to a *grist* mill, gives 15 horse-power for a 4-foot run grinding 5 bushels per hour (1878 Ed., p. 556). Leffel's Wheel Book of 1890, p. 48, allows 20 horse-power per run of 4-foot stones and auxiliaries in *merchant* mills, and from 10 to 12 horse-power for *country* mills. In 1913 the Leffel Co. gave 15 horse-power for a run of 4 to 4.5-foot stones, figured on needing 1.5 horse-power per bushel hour, or grinding 10 bushels.

Moore allowed 15 horse-power for a 4-foot stone and its machinery (p. 505) as did Leonard (1848, p. 40), and, also, Emerson (1894, p. 99).

Nordyke and Marmon's Mill Book allows 20 horse-power for 4-foot stone using 15 bushels per hour, or 1.33 horse-power per bushel for simply grinding the wheat.

Rechard, 1887 Wheel Book, says: "For *merchant* mills allow 20 horse-power to a pair of burrs (4 feet) and the necessary machinery for cleaning and bolting, and for *country* mills about 10 horse-power to a pair of burrs."

Hughes issued his first edition of "Miller's and Millwright's Assistant" in 1851. On p. 55 he gives a table relating to the "inches of water" needed with 4.5 and 4-foot stones in *grist* mills, stating that the powers are respectively 6 and 5 horse-power.

Hughes, p. 8, claimed to be a "practical miller." He had a small mill in Michigan having previously worked in a grist mill in Ohio, and said (p. 101): "This very day that I am writing this article, my own experience fully convinces me of this fact. I went to my usual avocation in attending the business of my mill. I have one of Howd's Patent

Digitized by Google

Direct Action Water-Wheels; my head and fall is usually about 5 feet. This day, November 26, 1848, I had high water setting back on my wheel 36 inches . . . "

Pallett, of St. Louis, in writing his " Miller, Millwright and Engineer," preface and copyright of 1866, absorbed p. 55 of Hughes, giving it on p. 227, without credit.

These two books are so often mentioned as authorities on the power of a run of stones that it is well to here reproduce the entire table and page referred to, as shown on p. 41.

In order to show the engineering meaning of this table, take a 4.5-foot stone, with its accompanying machinery in a grist mill, with 16-foot head, using, per table, 68 inches of water, and developing 6 horse-power. The article on " Inches of Water," later on, discloses that the corresponding water used is 15.1 cubic feet per second, which is 27.4 gross horse-power for the head selected. If only 6 horse-power is obtained, then the wheel efficiency is only 21.89 per cent, or only about two-thirds of that of an old-fashioned undershot wheel.

Note that Hughes, on his preceding page, discussed " Combination reaction wheels," which (p. 53) he mentions as represented by the Lansing turbine, and, on pp. 57–64, by the Howd and Jagger turbines. On p. 66 his table is for Jagger turbines of 65 per cent efficiency. Note, also, that on the page following the table Hughes takes up overshot and breast wheels whose efficiency, as is well known, ranges from 65 to 80 per cent for the former, and from 40 to 60 for the latter.

The same may be said of Pallett. On the preceding page he treated " overshot *or* breast wheels " (as if they were

Digitized by Google

A TABLE

OF THE NUMBER OF INCHES OF WATER NECESSARY TO DRIVE ONE RUN OF STONES, WITH ALL THE REQUISITE MACHINERY FOR GRIST AND SAW MILLS, WHICH WILL BE FOUND CONVENIENT FOR ALL PRACTICAL PURPOSES. UNDER HEADS OF WATER FROM 4 TO 30 FEET

Height of Head in Feet.	Size of Stone in Feet.		Horse-power.	Horse-power.	Number of Saws being One.
	4½	4			
4	558	460	6	5	The same quantity of water that is here used for a 4-foot stone is sufficient for one saw; and where a greater number of either saws or stones are required, you should double the quantity in proportion to the number, as in the case of four run of stones; you require four wheels, with the same number of inches for each size stone, as per table. But, in all cases for merchant flouring mills, you require an extra wheel, which all the machinery should be attached to, with about one-half the power as calculated for one run of 4½-foot stones.
5	363	300	.....	.....	
6	311	250	.....	.....	
7	245	200	.....	.....	
8	190	160	.....	.....	
9	163	130	.....	.....	
10	137	112	.....	.....	
11	122	102	.....	.....	
12	107	89	.....	.....	
13	95	80	.....	.....	
14	83	70	.....	.....	
15	75	62	.....	.....	
16	68	57	.....	.....	
17	62	51	.....	.....	
18	57	47	.....	.....	
19	52	44	.....	.....	
20	48	41	.....	.....	
21	45	37	.....	.....	
22	43	35	.....	.....	
23	39	32	.....	.....	
24	37	30	.....	.....	
25	35	29	.....	.....	
26	32	27	.....	.....	
27	31	26	.....	.....	
28	29	24	.....	.....	
29	28	23	.....	.....	
30	26	22	.....	.....	

identical), and on the page following his table he discussed the weights of columns of water.

Only one conclusion is evident, that both Hughes and Pallett were millers with experience restricted to small

Digitized by Google

grist-like mills, and unable to determine the powers used. Their books are compilations from outgrown writings on milling, principally relating to English practice.

If Hughes' 5 or 6 horse-power is sufficient for a run of stones, then it would produce not to exceed 10 barrels of flour per twenty-four hours. Yet Hughes states that the capacity of a run is 50 barrels per day (p. 89); 50 to 65 barrels (p. 89); 37.5 to 50 barrels (p. 96); and 70 barrels (p. 259). On pp. 82 and 83 he said " . . . a stone 4.5 feet diameter, making 175 R.P.M., grinding 15 bushels per hour . . . " On p. 203 he gives 4.5 bushels per barrel, so that 15 bushels is 3.33 barrels per hour or 80 barrels per day. In no part of Hughes' book is the amount of power given except in the table above referred to. It is evident that Hughes knew but little about power.

Pallett makes a 4.5-foot stone grind from 10 to 15 bushels per hour (pp. 30, 54, 67, 75) and no one believes that it can be done with his 6 horse-power. He makes (p. 181) a two-run mill grind 100 to 120 barrels per day, which no one believes can be done with twice his 6 horse-power. Comparing pp. 181 and 202, his steam plant, according to his own rules, makes 82 horse-power to produce 100 to 120 barrels per day in a 2-run mill.

A grist mill must, of necessity, have at least 2 *runs of stones, one for wheat and the other for corn and feed, since the dressing of the stones is different for these two uses* (*Pallett, p.* 45). *Accordingly a grant of sufficient water to operate a grist mill means at least from* 12 *to* 15 *horse-power for wheat milling, and from* 15 *to* 18 *horse-power for corn or feed grinding, a total of at least* 30 *horse-power.* In the early days

Digitized by Google

grist mills were abundant, there being 250 in Chester Co., Pa. ("Mill. Rev.," May, 1916).

B. W. Dedrick, in charge of the Milling School in State College, Pa., whose milling experiences began in 1876, and who has operated mills representing every stage of milling development since 1800, gives the power to operate a run of stones to produce 100 barrels per twenty-four hours, as

	Horse-power
1st. Old system of "flat" or low buhr stone milling.	31
2d. New system, or "half high" buhr milling.....	40
3d. With the "combination" system of rolls for breaking down and a buhr for grinding.....	40
4th. With a modern "roller" mill using ring-oiling bearings.....	30–35

"It is to be assumed that the mill stones are in good condition to grind the maximum capacity. Dull stones consume a great deal more power. Either the feed must be decreased, or the pressure increased by closer setting, which means increase of power, of 1 to 3 more horse-powers" (Dedrick).

The system of "flat" or "low" buhr milling lasted, in the United States, until about 1867 or 1868 (Ordway) or 1873 to 1874 (Dedrick), when it was replaced by the "half-high" system. In about 1875 or 1876 (Ordway) "breaking down" rolls were introduced and formed, with the grinding stones, the "combination" system. The full "roller" system began in 1877 or 1878 (Ordway) and had replaced stones in flour making, generally throughout the country, by 1890 (Dedrick).

Leonard's "Mechanical Principia," New York, 1848, treats

Digitized by Google

principally of water wheels and cotton mills. He, however, gives a table relating to a 4.5-foot stone, which, with accompanying machinery, will use 14 " calculated " or 12 actual horse-power (p. 149). He evidently had a *grist* mill in mind.

The writer has personally examined 52 *grist* mills, in 12 states, determined the wheels in use and measured the heads and falls, and found that these common country mills used from 12 to 18 horse-power per run of stone, including accompanying machinery, with an average of 15.3 horse-power.

In conclusion, enough has been given to show that a run of stones, with its accompanying machinery, called for

30 *to* 40 *horse-power in a first-class merchant mill yielding* 85 *to* 100 *barrels per day;*

20 *to* 25 *horse-power in a second class merchant mill yielding from* 50 *to* 60 *barrels per day, and from*

12 *to* 15 *horse-power in a common country grist mill.*

Definitions:

Grist: A portion of grain brought to a mill to be ground (Stand. Dict., 795).

Grist: A grinding. Grain carried to the mill to be ground separately for the owner. The amount ground at one time; the grain carried to the mill for grinding at one time. (Cent. Dict. III, 2628).

Flouring Mill: A mill for making flour, usually on a large scale; distinguished from grist mill (Cent. Dict. III, 2282).

Grinding Mills: Bed stone; a stationary mill stone, usually the lower one.

Runner: A revolving mill stone, usually the upper one.

Run of stones: A pair of mill stones in working order (Knight's "American Mech. Dict.," Vol. I, 1019).

Corn: Grains, such as wheat, rye, barley, maize, etc. In England it is usually understood as signifying wheat; while in America and in most parts of the world, the term implies maize or Indian corn (Herbert, Vol. I, p. 402).

Digitized by Google

Grain is the matured, clean, sound, air-dried seed of any cereal or buckwheat.

Meal, unless otherwise specifically qualified in these standards is a clean, sound product made by grinding the grain without the addition thereto or removal therefrom of any essential product or part thereof.

Flour is the fine, clean sound product made from wheat meal by bolting or by a process accomplishing the same result ("Mill. Review," January, 1916).

RUN OF STONES FOR CORN MEAL AND FEED MILLS

The legal weights of corn are, shelled at 56 pounds to the bushel, and 70 pounds on the cob.*

The Rogers Mill, at Hyer, W. Va., operates a 4-foot run on 200 bushels of corn a day, and a cob crusher on 30 bushels per hour, with a 25 horse-power engine ("Mill. Rev.," Nov., 1916.)

Wood's Mill, at Fredericksburg, Va., has (driven by electricity):

Two 3-foot stones at 240 R.P.M. on corn grinding, using 16 horse-power minimum and 20.5 horse-power maximum, and

One 3-foot stone at 240 R.P.M. also on corn meal, using 13.57 horse-power maximum and 5.25 minimum.

One Attrition mill with power range of 7.5 to 16 horse-power.

The Nesbitt Mill, at E. Springfield, Pa., reported, "I dressed the 54-inch burr feed run . . . The first hour I ground 1600 pounds of meal" ("Mill. Rev.," Apr., 1916). This is about 28 bushels per hour per 4.5 foot stone, when sharp.

* Oats weigh 32 pounds per bushel; barley, 48 pounds; rye, 56 pounds; buckwheat, 52 pounds; and bran, 20 pounds.

Digitized by Google

Bartley, 1900, p. 34, gives, for a 4-foot stone:

> 6 horse-power for 6 bushels of corn per hour; 8 horse-power for 9 bushels; and 10 horse-power for 12.

Wolfe's "Mill Book," p. 25, gives powers as follows for grinding corn with Munson's under runner buhrs:

Stone.	Bushels per hour.	Horse-power	Speed of Stone, R.P.M.
36	35 to 60	15 to 20	290
42	60 to 75	20 to 25	240

Pierce's mill, at Ivanhoe, Va. (erected in 1843), has (1917) two 4-foot buhrs at 160 R.P.M.

One grinds 10 bushels of corn per hour generally, but can be pushed to grind from 15 to 20 bushels.

Each run uses about 15 horse-power when grinding 10 bushels of corn per hour. One run is on feed.

This is at the rate of 1.5 horse-power per bushel hour.

In the trial of the case of *Carthage Tissue Mills vs. Village of Carthage (N. Y.) and Others* in 1904, Jos. V. Guyot testified that in 1845 he used a flat-vaned, central-discharge wooden wheel, 300 square inches throat, 9-foot head, to operate a run of stones grinding corn for meal, and, also at times on feed grinding. Calling the coefficient of discharge 95 per cent and the efficiency 35 per cent, the power developed by the wheel was about 17 net horse-power.

The Firtilitz Mill, near Lancaster, Pa., has a 20-horse-power wheel operating an attrition mill ("Mill. Rev.," Dec., 1915).

Moore, pp. 652-3, gives, for portable corn mills,

> 3.5-foot stone at 275 R.P.M., 15 horse-power, to grind 20 bushels of corn per hour into fine meal, or 30 bushels into coarse, or to *crack* 200 bushels.

Digitized by Google

B. W. Dedrick, of the Milling Department of State College, Pa., gives:

> 16 horse-power for a 4-foot stone, grinding 30 bushels of coarse feed, or from 10 to 12 bushels of fine corn meal per hour.

Wells, p. 153, says: "It requires about 1.33 horse-power to grind a bushel of corn (per hour) of ordinary hardness to an average fineness."

At the Sage Mill, Elkhardt, Ind., 1888, it took 42 horse-power to grind 20 bushels of corn an hour, or 2.1 horse-power per bushel hour (Emerson, 1894, p. 63).

Emerson reported another test he had made with a 16-foot breast wheel, 13 feet wide, with buckets 18 inches deep, 12-foot head, producing 28.08 horse-power and very coarsely grinding 2050 pounds per hour, or 1.3 bushels of old corn per horse-power per hour. He found (p. 73) that 1 horse-power coarsely ground from 2.1 to 2.2 bushels of new corn per hour (1894, pp. 72–3).

In a test at N. Sunderland, Mass., 29.5 horse-power drove a 5-foot buhr stone at 145 R.P.M., grinding 61 bushels of corn per hour, or 1 horse-power to 2.07 bushels (Emerson, 1894, p. 97).

Gump's "Old Mill Book" makes a 3-foot stone at 200 R.P.M. on wheat, or 350 R.P.M. on corn or feed, grind (without cleaning, bolting or dressing) as follows by the use of 16 horse-power:

10½ bushels of wheat, or 1.52 horse-power to simply grind a bushel per hour, or

27½ bushels of corn into meal, or 1.72 bushels per hour per horse-power.

42½ bushels of feed per hour, or 2.66 bushels per horse-power.

Digitized by Google

This mill book gives 1 horse-power for 2 bushels of feed per hour when ground in an attrition mill.

Smith's Mill, Skippackville, Pa., 1879, ground 24 bushels corn per hour with a 10.8 horse-power Cope wheel.

Craik ground 8 bushels of corn per hour with a 4.5-foot stone, or 8.33 bushels of mixed grain for feed (p. 131).

Tests by the Author, in 1912, at the Dunlop Mills in S. Richmond, Va., with three 4-foot and four 3.5-foot buhrs, at 180 R.P.M. showed that the 7 stones ground a total of 1200 bushels of corn meal in twenty-four hours with a 36-inch Smith-McCormick turbine, 18-foot head, 105 horse-power, or 7.1 bushels per run per hour, and 2.1 horse-power per bushel, and 15 horse-power per run. A bushel of meal being 48 pounds, 43 bushels of corn were ground hourly, or 2.44 horse-power were used per bushel of kiln-dried corn per hour. The product was a very finely ground meal.

The power a run of stones used in grinding corn meal, or in grinding feed, depended upon the size and speed and condition of the stone, and the amount of power available, as well as the strength of the feed to the buhrs, and the fineness of the meal. It was fully as much as the 12 *to* 15 *horse-power per run found for a grist mill on wheat, and probably ranged from* 15 *to* 18 *horse-power.*

CORN CRACKER OR CORN CRUSHER

Definition: "*Corn Cracker:* A farm or plantation mill having an outer iron shell with a corrugated inner surface, and a core or cone with sharp projections which, rotating within the shell, coarsely grinds the corn for stock feeding.

Digitized by Google

Used for grinding on the cob" (Knight's "New Mechanical Dictionary," Boston, 1884, p. 221).

This definition applies to the ordinary form of crackers or crusher found in almost every grist mill. It is constructed like the bark grinder found in tanneries and described by Morfit (1852, p. 132), and which ground a ton or cord of bark per hour with a 10-horse-power engine.

"In some mills, and many forms of *corn crackers*, metallic plates have been substituted for stones," among the first being a patent to Dervoux, for a French military mill in 1824 (Knight's "Amer. Mch. Dict.," Vol. I, 1020).

Hughes, 1851, p. 215, described Ross' "new and perfect machine for cracking corn on the cob," and says, that it is an improvement over the then old-fashioned corn crusher. The Ross cracker was "capable of cracking from 20 to 50 bushels per hour" when turning at about 200 R.P.M.

The Author recalls a horizontal corn cracker or cob crusher in use at Martintown, Wis., in about 1865. The revolving cylinder was a log of wood with heavy spike heads projecting from its surface. It was set in a case, the concave of which was also provided with heavy, projecting spike heads. The spikes extended outward about an inch. The ear corn was shoveled into the cracker and the product discharged, as broken cobs, shelled corn, and partially cracked corn at the bottom. There was an adjustment controlling the size of the broken cobs, etc.

Sometimes the product from the cracker was fed as such, but, preferably, it was put through a feed or chop buhr. The farmers believed that the cob was of value for distending purposes.

Digitized by Google

By a deed of 1867 Gardner, Makepeace & Smith acquired an old mill at Theresa, N. Y., and water rights " to drive the 5 runs of stone, *corn cracker*, smut machine," etc., in the mill. Snell testified that the " corn cracker was nothing but an old-fashioned bark-mill such as tanners use."

Millers call this machine " a corn cracker," a " cob crusher," and a " corn crusher," indiscriminately, but it relates to the treatment of the ear corn, and to the bark-mill type.

Schaeffer, Merkle & Co., Fleetwood, Pa., gave an excellent illustration of this corn cracker in their catalogue of 1886, and said, " Our Corn and Cob Breaker will break 30 bushels of corn per hour, and can be set or regulated by a set screw for fine or coarse. Corn can be cracked without running it over the chopping stones."

A similar illustration is found in Rechard's "Wheel Book" of 1887, p. 52, with a capacity of 30 to 60 bushels per hour, depending upon the setting as to a fine or a coarse product. This corn cracker, set coarse, was also used as a corn sheller. Again, it was used to crack and, also, to coarsely grind shelled corn.

The Ridgeway " Wheel Book," p. 111, gives a cut of a small corn and cob crusher requiring only ½ horse-power.

H. J. Woolcott, experienced miller, Steelton, Pa., says, that the present form of machine, which is like a coffee mill, is the same as used fifty years ago or longer, and " the power it requires—depends upon how fast you feed this machine which . . . runs all the way from 1 to 3 horse-power."

The Wolfe Co. states that such corn crackers use from 5 to 8 horse-power.

Digitized by Google

Sullivan's corn and cob crusher " for cracking, crushing and shelling corn " is given in the old Gump Mill Book, as having a capacity of from 100 to 125 bushels of product per hour, all being reduced to the size of the kernel, for his No. 7 machine, and from 50 to 100 bushels per hour when the product is reduced to the size of wheat or smaller. His No. 12 machine is given as reducing the product to half the size of a kernel for 125 to 200 bushels per hour. " The cone may readily be raised or lowered—securing a wide range of adjustment. The cob alone may be cracked, or the corn and cob reduced entirely to a coarse meal. . . . Eight horse-power will answer for any form of cracker . . . The speed can vary from 100 revolutions per minute upward; about 300 to 400 give high capacity."

The same mill book gives for the " Economy " corn crusher, which is a horizontal machine,—

No. 14. 20 to 35 bushel-hour, 500 to 700 R.P.M., 2 to 4 horse-power.

No. 15. 40 to 70 bushel-hour, 500 to 700 R.P.M., 4 to 8 horse-power.

The " Triumph " corn and cob crusher (of the inverted coffee grinder type) ". . . can be adjusted to crush the cob coarse, medium or fine, ready to be finished on the buhrs or rolls."

J. R. Thomas, an experienced miller of Richmond, Va., says that in his early days out west, " What we called a corn cracker was a 3.5 or 4-foot stone of open stock coarsely cracked and furrowed, and we used about 10 horse-power to put through 50 bushels an hour. We used the same stone to grind corn and oats, and all kinds of coarse feed." Shelled corn, rather than ear corn was used.

Digitized by Google

The Carter Mill, Luray, Va., had in 1888, one Alcott 24-inch turbine, 8-foot head, 8.8 horse-power at full gate. At half gate it operated a " chopper and corn crusher."

The O'Bold Mill, McSherrystown, Pa., 1883, drove " the choppers and corn crackers " with a 24-inch Rechard turbine, 9.5-foot head, 13.46 horse-power.

Worrall's Mill, West Chester, Pa., 1882, drove two 4.5 runs of buhr stones with accompanying machinery and a " corn breaker " with a 50-inch Cope wheel, 5-foot head, 15.6 horse-power.

A 20.4 horse-power Cope wheel at Wright's Mill, West Grove, Pa., 1882, ground 9 bushels of feed and also " breaks corn."

Odell's Mills, Croton, N. Y., 1871, drove a run of stones and, also, a " corn cracker " with a 14.6 horse-power Reynolds turbine.

Hibbard's Mill, New Windsor, Md., 1889, drove, simultaneously, a 2.5-foot and a 4-foot buhr stone, and a " corn crusher " with a Burnham turbine of 8.86 horse-power capacity.

Roger's Mill, Hyer, W. Va., with a 25 horse-power engine drives a " corn cob crusher " handling 30 bushels per hour, and a 4-foot stone for 200 bushels of corn per day (" Mill. Rev.," Nov., 1916.)

A 25-barrel " Midget " Marvel flour mill and a " Dreadnaught single attrition chopper and crusher " are driven by a 25 horse-power gas engine at Petersburg, O. (*Ibid.*).

Wait, 1871, stated that a No. 36 Champion turbine, 8.5-foot head, 16.8 horse-power will " drive a 4.5 foot buhr stone to grind 25 bushels of corn and cob per hour, and run a cracker at the same time."

Digitized by Google

From tests made by the Author at the Weaver Mill, near Hudson, N. Y., and elsewhere, the power used by an earcorn "crusher" or "cracker" ranged from 3 to 7 horse-power, dependent upon the speed, the available power and the steadiness and amount of the feed, and the fineness of the product.

WATER RIGHT FOR A DISTILLERY

The decree in the case of *Henry Rodee et al. vs. City of Ogdensburg et al.*, 1872, Supreme Court of St. Lawrence Co., N. Y., found that the water necessary for a "most approved" breast wheel turning a run of stones for grinding grain for a distillery, and the grain and meal elevators, and to turn and bolt and mash the meal was 25 cubic feet per second and 9-foot head. This is about 25 gross horse-power or 12.5 net horse-power with the wheel efficiency at 50 per cent.

STARCH MILL

Emerson, 1894, p. 62, gave a test, in 1888, at Muzzy's starch mill in Elkhart, Ind., using 1000 bushels of corn per day with turbines generating 56.37 horse-power.

Dynamometer tests of a 4.5-foot buhr stone, at 250 R.P.M., on the wet re-grinding of corn at the Kingsford Starch Works, in Oswego, N. Y., by Wm. H. Bullock, millwright, showed 65 net horse-power consumed by it in 1903. This stone reground the product from 3 runs of stones which had handled 2200 bushels in eight hours, and from which 30 pounds of starch per bushel had already been extracted. The second grinding yielded about 10 per cent starch.

Digitized by Google

WATER RIGHTS OF AN OAT MEAL MILL

Craik, 1870, p. 335, describes an oat meal mill and states that it requires less power than for grinding corn into meal.

In 1895, a 200-barrel oat meal mill, in Warren, Ill., was driven by an 80 horse-power steam engine, operated at rating, or it used 40 horse-power per 100 barrels per twenty-four hours (Brandt).

On Lot D, Factory Square, Watertown, N. Y., Kimball operated an oat meal mill from 1861, or earlier, down to 1887. It had a round pan-oven set over a furnace. A power-driven rake or agitator was used during the roasting. There were one 4-foot hulling stone, rigidly set; steel cutters for cutting the hulled meal; and separators, suction fans, elevators and conveyors (Rhines)

WATER RIGHTS OF PEARL BARLEY MILLS

Pearl, or pot barley mills are described by Pallett, 1866, pp. 91–93; Craik, 1870, pp. 366–382; Knight, 1876, p. 1550, Vol. II; and by Evans, 1795.

Up to about 1890 a pearl barley mill operated at Mottville, N. Y., having a right to the flow of water through an aperture of 100 effective, or 160 gross square inches under the head on the property of 16.2 feet. This right was limited to the use of 21.5 cubic feet of water per second under the head given, or to 31.3 net horse-power with a wheel of 80 per cent efficiency.

In this Mottville mill were an elevator and conveyor to a smutter; a four-section screen for assorting the barley;

Digitized by Google

four elevators and conveyors feeding the assorted seeds into storage bins; two pearling mills, one being used, while the other was being emptied and recharged; a dust elevator and conveyor; a finished pearled barley elevator and conveyor; and a packer. The mill used the full capacity of the water right, or 31 horse-power (Whitham).

Farwell and Rhines, under a grant of 1827 of "water sufficient to operate a machine shop, a forcing pump, and a trip hammer, in all equivalent to three wheels," upon what is known as lot D on Factory Square, at Watertown, N. Y., ran a pearl barley mill after 1887, for ten years.

This mill had three Scotch pearling stones for barley, one being in reserve, each 5 feet diameter by 14-inch face, turning at 200 R.P.M. They were encased in perforated metal, the casings being 6 or 7 inches away from the stones. A charge of about 3 bushels of barley was made, which, after treating for about thirty minutes, was automatically discharged. The pearler was then automatically recharged.

The first pearling removed the rougher coating from the barley. Pearling was repeated until the barley was reduced to the size needed. There were six sizes or gradings, from No. 1 to No. 6. The latter was about the size of "a pin head." The mill was usually operated on Size No. 3.

This mill used barley to produce 150 kegs of pearl barley, each 100 pounds, in seven days, using two pearlers. Rhines testified that the power used was from 40 to 50 horse-power per stone, or from 80 to 100 horse-power total, for 15,000 pounds of No. 3 pearl barley per week. Kimball had operated this mill from as early as 1861 down to 1887, using two pearlers at a time.

A split-pea mill is described by Craik, 1870, p. 364.

Digitized by Google

SAW MILL WATER GRANTS

Water grants for specific uses, and indefinite as to quantity to be conveyed, were made in the period from 1800 to about 1900. Those relating to saw mills were generally applied to plants having a flat, up-and-down saw of about 6 feet length by 7 or 8 inches breadth for a " gate " (Evans, Part V, p. 82), or 7.5 feet by 7 inches for a " mulley " (or gateless) blade (Pallett, p. 119).

The " sash " or " gate " saw (known as English gate) was set in a frame, resembling a window sash, and was thinner and ran slower than the mulley saw. The mulley saw was thicker and stiffer than the gate saw, and cut a wider kerf (Pallett, Elliott, Craik).

The speeds of these saws were:

" 200 and upwards per minute " (Pallett, 1866, p. 122; Reynolds, 1868).

120 to 130 R.P.M., driven by a flutter wheel (Pallett, 1866, p. 232).

150 to 180 R.P.M. (Bartley, 1900, p. 34).

" For a single upright saw allow 10 horse-power, speed about 175 per minute. If more power is used, increase the speed in proportion" (Rechard, 1887, p. 99).

150 R.P.M. will cut 2000 to 3000 feet per day, 10 horse-power allowed for a medium upright saw (Curtis, 1881, p. 53).

120 R.P.M. per Evans, 1795, Part V, p. 77.

" 400 clips per minute " (Reynolds, 1868).

100 to 130 strokes per minute, Jones (Evans, 1795, App. 9).

Digitized by Google

Such saw mills, as they existed from before 1795 down to 1860 or 1870, were operated by three water wheels.

The saw blade was driven by a flutter wheel in order to have a high speed. Pallett (p. 232) in 1866 wrote that flutter wheels "are mostly used for propelling the saw in saw mills—when the water is plenty, and the fall above 6 feet —(they are) low and wide when the head is small, and high and narrow when there is a high head . . . "

The log carriage was operated by a "spur" or "gig" wheel, generally of the pattern known as a tub wheel.

The logs were hauled to the carriage by a "bull" wheel, usually a tub wheel, which could readily supply two saws.

Excellent illustrations of these old saw mills are to be found in Plate IX of Part V of Evans' 1795 Ed.; Plate 28 of Gregory's Mechanics of 1806; Craik, 1870, Fig. 34; Glynn, 1885, p. 73.

Deeds of 1841 and 1853 for the Woodward saw mill at Wausau, Wis., were for a "double saw mill" with "2 water wheels" (one for each saw), "a bull wheel" (for pulling logs out of the river), "two gig wheels" (for driving the log carriages, and a wheel for the "edging saw," or a total of 6 wheels.

The 1842 deed for the Plumber mill at Wausau with its "double saw" prescribed 5 wheels.

The deed of 1848 (at Wausau) to Fahley for a "double saw mill" prescribed 7 wheels.

An old grant of water for "a saw mill" means, unless otherwise stated, sufficient to operate but one saw, its carriage and log drag, i.e., three primitive water wheels.

Digitized by Google

Before endeavoring to fix the amount of power needed to be generated to operate " a saw mill " it is well to study the old literature as to the power consumed in wood sawing and the product in board measure per day. Evidently this varies with large and small logs, green and dry wood, hard and soft woods, the sharpness or dullness of the saw, and the width of the kerf.

Haswell, 1854 edition, p. 297, described a steam saw mill with two vertical or upright saws, each with 34-inch stroke. A 10 by 48-inch engine at 35 R.P.M. was supplied with steam from three to 30 inches by 20 feet plain cylinder boilers, under 90 to 100 pounds steam pressure. The engines received steam at full stroke, which is equivalent to 54 horse-power production for 2 saws.

The wood sawed was yellow pine cut at the rate of an 18-inch board, 30 feet long, or 45 square feet per minute, or 2700 feet B.M. per hour. Accordingly 1 horse-power cut 50 feet B.M. of yellow pine per hour (see, also, Moore, 1880, p. 642).

Several authorities state that 1 horse-power will saw, with circular and gang mills, 75 per cent as much hard as soft wood. Applying this rule to the up-and-down saw, it would have sawed 37 feet B.M. of hard wood per horse-power per hour. From this it appears that the capacity of a single up-and-down saw is, *when supplied with ample power*, 1350 feet B.M. per hour of yellow pine, or 1000 feet of hard wood, using 27 horse-power.

Tests of the power used by such saws have been made as follows:

The McLaughlin Mill on Big Elk Creek, Md., had one up-and-down saw driven by a 14 by 8-feet overshot wheel,

Digitized by Google

with buckets 18 inches deep, spaced 21 inches apart, and developing about 25 horse-power (Whitham).

The Stevens Mill, built 1807, on Darby Creek, near Philadelphia, has such a saw driven by a 30.5-inch Leffel wheel since 1868, with a 12-foot head, producing 24 horse-power (Whitham, 1918).

The James Mill, on Ridley Creek, near West Chester, Pa., had, 1907, such a saw driven by a 20-inch Cope wheel, 15.25-foot head, 15 horse-power (Whitham).

The Dutton mill, on Chester Creek, near West Chester, Pa., had (1909) such a saw driven by a 30.5-inch Leffel wheel, 11-foot head, 19 horse-power (Whitham).

Ten mulley saws in New York State were, prior to 1877, provided with Leffel wheels averaging 20.6 horse-power, while 21 such saws, in various states, were listed in Leffel's "Wheel Book," of 1877, as averaging 19.2 horse-power.

As already noted, an upright saw at 150 R.P.M. is given by Curtis as using 10 horse-power, while Rechard gives the same power for 175 R.P.M., and the Haswell test gave 27 horse-power-hour, 1854, for a saw doing much more work.

D. C. Gibbs, a millwright, 1868, gave a product of 4000 to 5000 feet per day for 21 horse-power (Reynolds).

Moore, 1880, p. 88, makes a modern saw mill, using 36 horse-power, do the work of 150 men in saw pits handling 75 whip saws.

Craik, 1870, p. 241, complained of insufficient power in saw mills and urged ample wheel power.

Moore, 1880, p. 92, speaking of a saw mill, said "Give it plenty of power, if you don't, you might as well shut up shop at once."

The Adams Mill, near Rockland, Del., built in Colonial

Digitized by Google

days, has a steel overshot wheel of 22 horse-power for its up-and-down saw. It took the full power to slowly saw an 18-inch oak log (Whitham, 1914).

The Peters' Mill, Bushkill, Pa., 1870, had an up-and-down saw, 24-inch stroke, driven by a flutter wheel 2 feet diameter by 8 feet long, with a head of 12 feet, and speed of 180 R.P.M. The carriage was driven by a 3-foot flutter wheel, 2-foot face, turning on an upright shaft. The product was only about 1000 feet B.M. per ten hours (Millwright C. D. Wallace).

Wait, 1871, gives a 19.8 horse-power Champion turbine to drive a saw, and stated that a similar wheel of 17 horse-power drove Lyttle's saw.

In the trial of the *Carthage Tissue Paper Mills vs. Village of Carthage et al.* in the Supreme Court of Jefferson Co., N. Y., a grant of 1830 called for " . . . a sufficient quantity of water to carry saw for a saw mill, or 3 pairs of grinding stones." The Decree placed this grant at 800 inches of water. The head is 9 feet. On page 37, it has been shown that this grant amounts to 136.2 gross horse-power. Calling the wheel efficiencies 20 per cent in 1830, the net horse-power determined was 27.2 horse-power.

In the same action was a grant of 1853, or " Right to carry a common double saw mill having 2 gates, 2 flutter wheels, 2 spur wheels, 1 bull wheel." The " two gates " mean two (English) gate saws, i.e., two up-and-down saws each set in a sash or gate frame, as distinguishes from the mulley saws. The flutter wheels drove the saws, the spur wheels operated the log carriages, and the single bull wheel supplied logs from the mill pond for the two saws.

The court found and decreed 1400 inches of water as

Digitized by Google

representing this grant. The head was 9 feet. The decree calls for 233.3 cubic feet per second, or 238.6 gross horse-power. Such wheels would have an average efficiency of about 20 per cent, so that the saw mill used for its two saws 47.7 horse-power, or about 24 horse-power per saw.

It is unnecessary to consider the 5 horse-power per saw given by Hughes, 1851, p. 55, Pallett, 1866, p. 227, and Leonard, 1848, pp. 147–8. Leonard allows 1 horse-power more for the up-and-down than for a circular saw of unknown diameter and speed. These men are answered by examples and records of such saws in use to-day.

An up-and-down saw, properly supplied with water, used from 20 *to* 25 *horse-power, including the driving of the log carriage and the log pulling. As constructed the primitive wheels were wasteful in water, so that the amount used would produce much more power with modern wheels.*

Although few water grants for saw mills alluded to the use of water to operate a gang saw or a circular saw, and although the power such saws take is so largely dependent upon the diameter and speed of the circular saw, or the number of blades in a gang saw mill, as well as upon the character of the wood handled, yet it may be well to briefly summarize the old literature upon these two kinds of saw mills.

Circular saws were introduced into England, from Holland, by General Bentham, and were in use at the Portsmouth dock yard in 1826 (Nicholson, 1826, p. 444; Jamison, 1836, p. 913). Their use began in this country before 1848 (Leonard, p. 147), and quickly became general. The use of gang saws preceded circular saws in America, and were mentioned in a water grant of 1824 at Baldwinsville, N. Y.

Digitized by Google

Gangs had been used on the Danube as early as 1575. Benj. Cummins, of Bentonsville, N. Y., made the first circular saw in the United States in about 1814, but their use grew out of the 1820 patent to Eastman and Jaquit, of Brunswick, Me. The endless band saw, invented by Wm. Newberry, London, Eng., in 1808, came into extensive use in about 1870 (Disston).

Craik, 1870, p. 234, said that a gang saw, with 2 or 3 dozen saw blades, usually took twice the power of a single up-and-down gate saw, and that a large circular saw used twice as much power as the gang saw. He meant that these saws, not only took the extra power, but, also, cut more wood in proportion.

The gang saws consisted of a number of small blades, all individually set in a common gate, or sash, so as to completely cut the log at one time, rather than a board at a time. They were known as a "live," a "stock," and a "Yankee" gang mill (Craik, pp. 223–228). Gang mills made the smoothest and best lumber, commanding the highest prices. Craik, on pp. 141–143 described several gang mills in northern New York.

Barnes' saw mill at Pine Lake, N. Y., 1882, had a 36-inch Lesner turbine, 11-foot head, 31 horse-power, driving a gang with 30 saw blades, to cut 1000 feet B.M. of 1-inch boards per hour, spruce and hemlock, or to saw 32 feet with 1 horse-power.

A gang mill making 120 strokes per minute, stroke of 20 inches, uses 1 horse-power for 45 feet of dry pine, or 34 of dry hard wood, oak, etc. (Haswell, 1878, p. 557; Moore, 1880, p. 93).

Turbines of 105 horse-power capacity drove Roads'

Digitized by Google

double gang saw mill at Eau Galle, Wis., or 52.5 horse-power per gang (Leffel, 1877).

The literature upon circular saws may be summarized as follows:

The perimetral speed of circular saws is given as 7000 feet per minute by Craik, 1870, p. 241, and from 6000 to 7000 feet by Moore, 1880, pp. 90–93. Moore lists saws up to 76 inches diameter.

Leffel's " Wheel Book," of 1877, gives a list of 69 mills, each with an undefined circular saw, the turbines for which averaged 32.6 horse-power per saw. It also gives turbine capacities of 20 horse-power for a 30-inch saw; 22.7 horse-power for a 40-inch; 23.2 for a 48-inch; 26.5 for a 50-inch; 40.3 for a 54-inch; 58.9 for a 60-inch; and 52.8 for a 72-inch circular saw.

Victor wheel capacities averaging 34.5 horse-power were given for 18 mills, in 1885, per circular saw.

Craik, 1870, pp. 242–3 gives for soft wood lumber produced in twelve hours:

	2,500 ft. B.M. by expending	12 h.p.,	40 in. saw.
	4,000	15	48
6 to	7,000	20	54
8 to	9,000	25	60
9 to	11,000	30	72
12 to	18,000	40	Largest made.

Carley's " Wheel Book " gives the production of circular saws in twelve hours as 52-inch saw, 2 to 5000 feet B.M.; 56-inch, 8 to 10,000 feet; and 60-inch saw from 10 to 15,000 feet depending upon the kind of wood.

The Curtis " Wheel Book " of 1881 gives 15 to 20 horse-

Digitized by Google

power for sawing 3 to 5000 feet of pine or hemlock in ten hours; and 35 horse-power for 1000 feet per hour of the same, the latter with a 48-inch saw.

Bartley's " Wheel Book " gives productions in ten hours of 4 to 6000 feet B.M. with 15 horse-power; 6 to 10,000 feet with 15 to 20 horse-power; 8 to 15,000 feet for 20 to 30 horse-power; and 12 to 20,000 feet with 20 to 40 horse-power, depending upon the kind of wood.

A mill in Utah sawed 5000 to 6000 feet in twelve hours with a 52-inch saw, using a 20 horse-power engine (Leffel, 1883, p. 20).

The table on p. 65 of the products of circular saw mills has been compiled from various Wheel Books.

SHINGLE MILL

Gannett's mill, at North Fairfield, Me., 1881, had a production of from 20 to 24,000 shingles daily, using a Curtis turbine of from 20 to 30 horse-power.

Whitmore, Washington, Me., 1881, had a Curtis turbine, of the same power as Gannett, driving a board saw, 1.5-inch cut; a cylinder stave mill, 0.75-inch cut; a cut-off saw; and a shingle machine.

Osborn, Square Village, N. J., 1869, had a Reynolds wheel of 18.5 horse-power capacity for driving a 42-inch circular saw and a small saw on pickets and shingles.

Shank, at Shanksville, Pa., 1889, used an 11 horse-power Burnham turbine to drive two 24-inch and one 10-inch saw for shingles and laths.

Digitized by Google

Circular Saw Mill and Place.	Date.	Saw, In.	Wheel.	Product of Mill.
Gray's, Big Rapids, Mich.	1882	....	79-h.p. Leffel	30 to 35,000 ft. day, also edger and slab cutter.
From Trump's "Wheel Book"	....	....	27-h.p. Leffel	"Power necessary to drive small country mill."
Iver's, Stevensville, Mont.	....	24	44½-h.p. Leffel	Also drove a shingle, cut-off and lath saw, and 20-in. planer.
Zinn's, Shiremanstown, Pa.	1882	48	12-h.p. Rechard	3000 ft. oak lumber per day.
Clearwaters, Rhinebeck, N. Y.	....	54	24-h.p. Alcott	Sawed hardwood.
Bigalow's, Newfoundland, N. J.	...	54	34-h.p. Alcott	Did not use all the water power.
Blackburn's, War Eagle, Ark.	1881	....	37-h.p. Victor	1000 ft. of 1 in. boards an hour.
Spear's, W. Suffield, Conn	1885	48	24-h.p. Victor	
Daniell's, Woodstock, Va.	1885	54	65-h.p. Victor	1000 ft. in 35 min.
Palmer's, Wagnersboro, Va.	1885	52	93-h.p. Victor	4000 ft. hard wood lumber per hour.
Perkins', Bakersfield, Va.	1889	....	40-h.p. Eureka	8 to 1000 ft. in an hour.
Hubbard's, Guilford, Conn	1888	54	31-h.p. Eureka	
Allen's, Westport, Mass	1858	....	25½-h.p. Warren	
Loughinghouse's, Boyds F'ry, N.C.	1856	60	46-h.p. Warren	
Pardee's	1886	....	35-h.p. Bodine	15,000 ft. daily.
Allen's, Rossie, N. Y.	1885	54	28-h.p. Curtis	1000 to 1300 ft.hr.
Skerry's, S. Bangor, N. Y.	1881	....	38-h.p. Curtis	10 to 12,000 ft. day.
Bronson's, Ogdensburg, N. Y.	1881	54	40-h.p. Curtis	2000 ft.hr. saw at 600 R.P.M. saw feed 3 in.
Hindbind's, Montgomery Cr., Cal.	1889	....	81-h.p. Burnham	Over 3500 ft. yellow pine per hour.
Grimsley's, Ft. Gaines, Ga.	1889	2–52	36-h.p. Burnham	10 to 12,000 ft. per day.
Lewis', Mt. Airy, Md	1889	50	16-h.p. Burnham	
Thary's, Shoals, W. Va.	1889	....	16½ h.p. Burnham	3 to 4000 ft. per day.
Griggs', Holland, N. Y.	1889	....	47½-h.p. Burnham	600 ft. maple per hr.
Hunt's, McIndoes, Vt.	1889	50	58-h.p. Burnham	
Wimberly's, St. George, S. C.	1889	....	35-h.p. Burnham	4 to 5000 ft. pine lumber per day.
Knapp's, Knapp, Pa.	1889	....	27½-h.p. Burnham	5 to 7000 ft. per day.
Prince's, Farmville, Va.	1889	46	18-h.p. Burnham	Saw at 450 R.P.M.
Swope's, Old Hundred, N. C.	1889	52	24-h.p. Burnham	6 to 7000 ft. yellow pine per day.
Rand's, Goldsboro, N. Y.	1889	50	17-h.p. Burhnam	500 ft. boards per hr.

Digitized by Google

BARK MILLS AND TANNERIES

Many grants of water were made between 1800 and 1880 for the operation of " a bark mill " and for the use of " a tannery." A grant for a bark mill is comparatively definite as to the power the water granted was to produce. The grant for a tannery is necessarily vague and uncertain, since the water power used will depend upon the number and kind of hides treated per day, and whether sole leather, uppers, cow hide, sheep and calf skins, etc., are tanned. In any event, as with all grants for a specific use, the state of the art as to water wheel construction and efficiency, must be considered for the particular time and place. If any one is available to give the history and use made of the water power upon the premises, then a definite measurement of the grant is possible. Otherwise, the state of the art as to the particular industry and probable wheel installation must be studied and used to assist in forming a conclusion.

A bark mill alone might be used in the preparation of extracts, which would be sold as such. Again, a tannery might buy its extracts and not have a bark mill. But it is generally understood that, except in large modern city tanneries, a " tannery " includes a bark mill and machinery for treating and finishing the hides.

A bark mill has been described as almost identical in construction with a " Corn Cracker," used for crushing corn-on-the-cob. It differs, only, in that just above the revolving cone are ear-like cast-iron lugs which strike the bark and break it into pieces suitable for grinding in the mill.

The Author tested two such bark mills in 1913 at the

Digitized by Google

Cover Tanneries, in Elkton, W. Va. The two grinders used 24.7 horse-power; their drag conveyors 2.2 horse-power; and the friction of the engine and its driven jack shaft was 12.1 horse-power; making a total of 39 horse-power, or 19.5 horse-power per bark mill. The power was measured at five-minute intervals for one-half day, and the results here given are averages (See p. 69 for details of this tannery).

Gregory's "Mechanics," London, 1806, Vol. II, pp. 103–6, described a primitive bark mill and tannery in England.

Morfit, 1852, p. 132, states that " When (a bark mill) is worked to its utmost capacity, it will grind from 1 to 2 cords of bark per hour, and must be driven at the rate of 150 R.P.M. by a 10 horse-power engine." This relates to the Wiltse mill, as made at Catskill, N. Y.

Rechard, 1887, pp. 100–2, gives an illustration of a bark mill, speed 60 to 80 R.P.M., and requiring 8 horse-power to grind a cord of bark per hour.

On the Indian river, 1½ miles above Theresa, N. Y., was a tannery with the right to use 400 inches of water (Deed of Henry to Wm. N. Seeber, Dec. 5, 1848, Recorded in Book 89, p. 162 of Records of Jefferson Co.). The head at this place is 10 feet. The grant, accordingly, calls for 70 cubic feet of water per second, corresponding to 79.5 gross or theoretic horse-power. With breast wheels of 50 per cent efficiency the net power is about 40 horse-power.

In the 1911 trial of the *Carthage (N. Y.) Machine Works vs. Island Paper Co.* one issue was the water power used by a tannery handling 100 hides of sole leather per day (1840 to 1860), and having a bark mill grinding 9 to 12 cords or tons of bark per twelve hours; a double kicker or hide mill

Digitized by Google

or fulling machine; a cage scrubber or scourer for the hides; a liquor pump, under about 7-foot head; a leather roller for dressing tanned hides; and a small drinking water pump. The wheels used were undershot and flat-vaned wooden central discharge, under a 6-foot effective head, although the property head was 11 feet. Old operatives testified to these facts and gave dimensions as to the sizes of the wheels.

Experienced tanners and engineers gave evidence as to the power required, dividing it as follows:

Item.	Hiteman Bros., of W. Winfield, N. Y. H.p.	Babcock & Whitham, of Utica & Phila. H.p.	Fosser of Newberry, Pa. H.p.	Randolph of Camden, N. J. H.p.	Thomas, of Little Falls, N. Y. H.p.
Bark Mill	25 -35	15	15–20	10	10
Kicker	5	5	10 -20	5	6
Scrubber	4 - 6	3	2- 3	4	4
Liquor pump	5 - 6	5	4- 5	5	6
Leather roller	6	4	5- 6	5	2
Spring pump	½- 1	1	1	1	¼
Friction of drives	10	10	Included	10	10
Total h.p.	55½–69	43	37–55	40	38¼

The last three men were not called, but made the power estimates given.

The Hubbard tannery, at Oswego, N. Y., is described in the Oswego "Directory and Compendium of Useful Information," 1852, as occupying a building 200 by 45 feet, with three wings, each 75 by 50 feet. It had 159 vats, tanned 40,000 hides in 1851, and had a yearly capacity of 50,000. It employed 25 hands.

The Hubbard tannery had leases, from the Hydraulic

Digitized by Google

Canal Co., of water power defined in terms of runs of stones. It had undetermined leases for 2.5 runs, and a lease for one-half run which was defined and produced 8.33 gross horse-power. On the opposite side of the river a lease has been adjudicated as water equivalent to 37.75 gross horse-power per run, so that, on this basis, the tannery leases aggregated $(2.5 \times 37.75 + 8.33 =)$ 102.7 gross horse-power, or about 60 net horse-power with 60 per cent wheels.

The Mosser bark mill and tannery, Newberry, Pa., had in 1911, a daily capacity of 450 sole-leather hides. Its steam power was measured to be a trifle over 200 horse-power or 44 horse-power per 100 hides per day (Whitham's test).

The Cover tannery, at Elkton, W. Va., 1913, had the 2 bark grinders, described (on p. 67) as using 39 horse-power. It also had 4 leather rollers, one unhairing machine, a lime mixer, an oiling wheel or drum, 4 vat rockers and two 4-inch rotary liquor pumps, using 18.4 horse-power. Two fans used 10.6 horse-power and sundry pumps 15 horse-power. The total measured power was 83 horse-power. This Cover tannery handled 110 sole leather hides daily, or 220 sides, using 75.5 horse-power per 100 hides per day (Whitham's test).

The Jannery tannery in Philadelphia has no bark mill and leachers. On a twenty-hour test in 1913 it treated 225 sole leather hides (450 sides) using 146 engine horse-power, or 65 horse-power per 100 hides per day. (Whitham's test.)

In the *Carthage Tissue Mill* case, it developed that the grant of 1866 of water for a 5-run " common, country, grist mill," decreed as 1100 inches of water (p. 37), was used for

Digitized by Google

eighteen years as a tannery having four central-discharge flat-vaned wooden wheels, operating, respectively, the bark mill, the hide mill, the leather roller and the pumps. The head was 9 feet, calling for 183.5 cubic feet per second, or 187.5 gross horse-power. Placing the wheel efficiency 40 per cent for such wheels, the net power was 75 horse-power.

Hiteman Bros., at W. Winfield, N. Y., handle 1800 hides daily on calf skin uppers, and use from 125 to 150 horse-power (1911).

A small sumac extract mill requires 15 horse-power according to Rechard (1887, 100).

AXE FACTORY WATER USES, OR MACHINE SHOP WATER GRANT OF 1833

The 1833 grant at Carthage, N. Y., was for "sufficient water to carry a machine shop." The size of the building was given in the grant as 34 by 44 feet with 3 stories and a basement.

The water power was used for an axe factory, with a machine shop on the second floor, which, though burned in 1836, was immediately rebuilt and operated down to about 1860.

The only evidence before the court was given by Guyot, born 1826, as follows:

	Inches of Water.
Bellows was driven by a high breast wheel 10 feet diameter by 3.5 feet wide used "pretty constantly" to blow the fires to make axes, and using about	150

Digitized by Google

	Inches of Water.
Drop or tilt hammer was driven by an undershot wheel about 6 feet diameter, operating about one-third of the time, two or three minutes at a time, and using about	150
Grindstone, to grind and polish the axes, was driven by an 8-foot undershot, about 8 feet wide, with gate opening 8 inches by 8 feet and used " pretty steady "	768
Machine shop on the second floor was operated by an 8-foot tub wheel with throat of spout at the wheel of size 14 by 20 inches	280
Up to 1848 the 4 wheels used about	1348

In 1848 the grindstone was replaced by a 600-pound forge hammer driven by a new undershot wheel with a gate taking 10 inches by 8 feet of water, or about 960 inches, rather than 768 as before.

From 1848 to about 1860 the plant took about 1540 inches of water.

The head is the same now as formerly, or about 9 feet.

The court decreed that this right called for 1500 inches of water, which measures the power to " carry a machine shop." It, also, measured the power to carry an axe factory, as developed at the time and place.

The water called for by the decree, with 9-foot head, is 250 cubic feet second; and corresponds to 255.7 gross horse-power. Calling the average efficiency of these small wheels 30 per cent, the power was 77 horse-power.

A large part of this power must have been absorbed by

Digitized by Google

the friction of transmission, as was the case in all of the early and primitive developments.

The Lyman lease, of 1826, on the Hydraulic Canal, at Oswego, N. Y., was for water to " turn and keep in operation such necessary machinery as the said (Lyman) may . . . use for the purpose of *working metals and making machinery of the same* . . . provided that the water so to be taken and used . . . shall not exceed the quantity which shall be necessary to keep in operation a *common saw mill* constructed upon the most approved plan with one saw."

This Lyman lease has never been adjudicated and fixed. It was a machine shop lease. It has all along been considered the same as a run of stones and its accompanying machinery, by the water takers on the canal. The head on the property was 17.14 feet in 1908. On the other side of the river a run of stones has been decreed to be enough to make 30.25 net horse-power with an 80 per cent efficient turbine (p. 26).

The Author has measured the power in at least twenty small machine shops, attached to industrial plants, consisting of a post drill press, grindstone, a planer, and a couple of metal lathes, and found that 15 horse-power is ample. But where a shop is opened for general repair or construction work, the power required is seldom less than from 25 to 30 horse-power unless it is little more than a one-man shop.

Digitized by Google

WATER RIGHTS FOR BLAST FURNACE-BELLOWS-BLOWERS IN IRON WORKS

As indicating, somewhat, the extent of water power required to operate an early Blast Furnace, the following summary of the literature upon them is here given.

Haswell (1844 edition, p. 261) gives data regarding the blowing engine for an iron furnace at Lanakoning, Md., as follows:

The furnace had boshes 14 feet diameter, which fell in or narrowed 6.33 inches to every foot rise. The blowing engine had a steam cylinder 18 by 96 inches. The air compressor had a cylinder 60 by 96 inches. The speed was 12 R.P.M. The steam pressure was 50 pounds. The air-blast pressure was from 2 to 2.5 pounds for a quantity of 3770 cubic feet minute. There were five boilers, each 3 by 24 feet. The air required to produce 10 tons of pig iron and burn 50 tons of coal was 100 tons. The ore yielded 33 per cent of iron. The power required to operate the blast was about 50 horse-power.

Haswell (1860 edition, p. 300) gives the following data for the operation of a blast furnace at Mount Savage, Md.: There were four furnaces, each 14 feet diameter, and each producing 100 tons of pig iron per week. A condensing engine, with 56-inch by 10-foot cylinder, at 15 R.P.M., was supplied with steam at 60 pounds pressure, and operated at 25 per cent cut-off. The steam was supplied by six boilers, each 5 by 24 feet, with a 22-inch flue in each, double returned. The grates were 198 square feet. The blast cylinder, driven by the steam engine, was 126 inches diameter by 10-foot stroke, at 15 R.P.M. The blast pressure

Digitized by Google

was from 4 to 5 pounds per square inch. The blast pipe sectional area was 20 per cent of the blast cylinder piston's area. The engine power made is computed to be about 200 horse-power per furnace.

Haswell (*Ibid.*) gives an example of a blowing engine for "two furnaces and two fineries," making 240 tons of "forge" pig iron per week. A non-condensing engine of 20 by 96-inch cylinder, at 28 R.P.M., operated with steam of from 50 to 60 pounds pressure. The steam followed full stroke in the cylinder. It drove two blowing engines, each with cylinder 62 by 96 inches at 22 R.P.M., providing a blast of 2.5 pounds per square inch. One blast furnace had two 3-inch and one 3.25-inch tuyeres; the other had three 3-inch. One "finery" had 6 tuyeres 1.125 inches and the other four of 1.125 inches. The ore yielded from 40 to 45 per cent of iron. The blast temperature was 600° F. The engine power developed is computed to be 210 horse-power, or 55 horse-power per furnace.

In the case of the *Carthage Tissue Paper Mills vs. The Village of Carthage (N. Y.) et al.*, the water rights of the Blast Furnace property were decreed to be 1400 inches of water. The head was 9 feet. The furnace was built in 1819 and operated until 1875 or 1876. It had a 25 by 6-foot undershot wheel for the bellows or blast, and "S" wheel for operating the ore crusher, and a 14 by 5-foot undershot wheel for cinder stamping. The decree calls for 233.33 cubic feet of water, which would give about 239 gross, or 72 net horse-power, the wheel efficiencies being taken at 30 per cent.

Haswell (1854 Edition, p. 179) gives a 24 by 6-foot overshot wheel, with seventy 14-inch deep buckets, and a

Digitized by Google

stream 0.75 by 51 inches under a 6.5-foot head, the wheel making 4.25 R.P.M. to drive two 60 by 61-inch blowing cylinders in Peter Townsend's furnace, at Monroe, N. J., to produce 34 tons of No. 1 iron per week. The data given calls for about 11 net horse-power.

Bennett's "D'Aubuisson," 1838, pp. 344-5, gives an undershot wheel 20.34 by 13.45 feet, at 7 R.P.M., with 40 buckets each 2.3 feet broad, supplied by a stream of water 8.89 square feet at a velocity of 16 feet second, or 141.3 cubic feet second to supply 26.49 cubic feet of air per second for a blast furnace. This is equivalent to about 12 horse-power to operate the blast.

In the trial of the Carthage Tissue case, it was shown that a breast wheel used 150 inches of water to operate a blast for heating axes in an axe factory. This corresponds to about 25 cubic feet of water per second, or to 9.5 net horse-power with 40 per cent wheel efficiency.

Leonard, 1848, p. 150, gives 6 horse-power per ton of No. 1 iron per day, and on pp. 143, 144, he gives a table of sizes of overshot and breast wheels to be used.

In about 1770 the Long Pond Forge was established at the present site of Hewitt, N. J., and received its water from the outlet of Greenwood lake. Prior to 1835 Ryerson, who then owned the forge property, constructed a crude stone dam across the lake outlet in order to store water for use by his forge and saw mill during the dry season. It also provided better power for the small furnace of 1812, which he was then operating in conjunction with the forge and saw mill.

On March 7, 1837, Ryerson deeded to the Morris Canal and Others property with the following reservation: "Ex-

Digitized by Google

cepting, also, and the said Jacob M. Ryerson hereby expressly reserves to and for himself, his heirs and assigns forever, the right to draw and having, at all times, from said reservoir (Greenwood Lake) through the gates of said new dam (at outlet of said Lake) so much water as will with the natural flow of the intermediate streams be sufficient for all the necessary purposes of *a forge with two fires and a saw mill with one saw* at the site of his present Long Pond forge and saw mill."

This property for many years operated two blast furnaces under this water grant supplied with power by two overshot water wheels as follows:

The lower wheel was 25 feet diameter by 6 feet 10.5 inches effective width. It had 82 elbow buckets, 15 inches deep. The sluice gate was 6 feet wide with an 8-inch lift. The head on the center of the sluice opening was 39 inches.

The upper wheel was 24 feet 10 inches diameter by 6 feet 11.5 inches effective width. It had 76 elbow buckets, 13.5 inches deep. Its sluice gate opening was 6.25 inches by 6 feet, with 39-inch head.

The wheels had a capacity for 48 and 36 cubic feet per second respectively, and, at 80 per cent efficiency, could produce 116 and 86 net horse-power, or a total of 202 horse-power (Whitham).

IRON ROLLING MILLS

Nystrom, 1865, p. 154, gives 80 horse-power to operate an iron rolling mill having 2 pairs of roughing and 2 pairs of finishing rolls, each at 70 R.P.M.; 6 puddling and 2 welding furnaces; and a production of 10 tons of bar iron

Digitized by Google

in twenty-four hours. He gives 5 horse-power per square foot of plates rolled in a plate mill.

Bennett's "D'Aubuisson," pp. 351–353, describes a 30-horse-power breast wheel and its design such as is suitable for a rolling mill of the "ordinary kind"; while some, operated at a greater velocity, use 50 horse-power. He proposed a breast wheel 24.28 feet diameter, with 48 floats 10.5 feet wide, turning at 6 R.P.M., with an available head of 8.2 feet; and using 50.7 cubic feet of water per second for 48 gross, or 30 net horse-power.

Fairbairn, p. 540, describes a rolling mill and illustrates it in his Fig. 325.

WATER RIGHTS TO DRIVE A TILT OR TRIP-HAMMER

Rights have been made of water sufficient to operate a trip or tilt-hammer. The old literature is:

Nicholson, 1826, p. 334, gives a hammer of 3.25 hundredweight, 17-inch lift, 150 blows per minute; or one of 2 hundredweight, 14-inch lift, 225 blows; or one of 1.33 hundredweight, 12-inch lift, 300 blows per minute, as being operated by an 18-foot overshot wheel, at 6.25 R.P.M. Also, he gives a mill having a 2-hundredweight hammer operating at 350 blows per minute, and two 1.33 hundredweight at 400 blows.

Overman (1851, p. 261) illustrates a small trip hammer with 500 strokes per minute for a 2-inch lift, 400 for 3-inch, 300 for 6-inch, and 200 for 10-inch.

Haswell (1878, p. 441), states that 17.5 cubic feet of water per second, falling 25 feet onto an undershot wheel,

Digitized by Google

drove a 1500-pound hammer, at from 100 to 120 blows per minute, the lift ranging from 12 to 15 inches. This is 16.7 net horse-power for a 33 per cent efficient wheel.

Haswell, also, gave 21.5 cubic feet of water per second, 12.5-foot fall, 7.75-foot undershot wheel, 500-pound hammer at 100 blows per minute, 34-inch lift. This is 10.5 net horse-power with a 33 per cent wheel efficiency.

Bloxam's "Metals," 1876, p. 76, states that the power to drive a trip hammer varies with the weight of the hammer, its lift, and the rapidity of the blows. For a small machine shop it is probably a 500-pound hammer making 60 blows per minute, and using 7 net horse-power. But in order to use the hammer, a forge is required and one too large for hand operation. From 12 to 15 horse-power would be required to operate this hammer and its power blast.

In the *Carthage Tissue Paper Mills case* an undershot wheel was used to drive a 600-pound forge hammer. The wheel operated under 7-foot head, with a gate opening of 970 square inches. This corresponds to about 15 net horse-power.

Beardmore's "Hydrology," 1850, p. 20, gives Rennie's tests of a water wheel producing 8.9 net horse-power driving a 7-hundredweight hammer, 106 blows per minute, 20-inch lift.

Bennett's "D'Aubuisson," 1838, p. 400, gives the following table of trip hammer tests with water wheels. The first tests were made by Egen, and those at Agennois were by D'Aubuisson (see page 79):

D'Aubuisson found that the quantity of water needed for a hammer increased nearly as the cube of the hammer's velocity.

Digitized by Google

Place.	Hammer.			Wheel Diam., Ft.	Fall, Ft.	Cu.ft. Sec.	Gross, H.p.
	Weight, Lbs.	Lift, Ft.	Blows, Min.				
Westphalia.....	66	0.59	313	8.82	16.27	10.806	20.1
Westphalia.....	154	1.54	224	7.48	14.04	22.249	35.5
Westphalia.....	496	2.88	103	7.74	12.40	21.542	31.5
Agennois.....	1323	2.13	85	6.72	11.15	15.185	19.5
Agennois.....	705	2.29	110	6.86	11.81	15.892	21.6
Sweden.....	705	.....	90	9.18	11.74	15.892	21.5

Morin in 1836 conducted very complete overshot wheel tests, the power being used to drive a tilt hammer (Weisbach, II, 193).

Whitney deeded to Greenley and Williams land on which was erected a furnace in Binghamton, N. Y., in a building 40 by 56 feet, " . . . land and building to be used exclusively for furnace and trip hammer, with the privilege of taking water from the pond . . . equal to 2.5 horse-power " (recorded Oct. 16, 1829, Book 12, p. 162, Clerk's Office of Broome County).

WATER RIGHTS FOR A NAIL FACTORY

Leonard's " Mechanical Principia," 1848, pp. 139, 140, gives a table of overshot and breast wheels to operate nail cutting machines, while on p. 150, he gives 9 horse-power to operate 6 machines, 10 for 7, 12 for 8, 13 for 9, and 15 horse-power for 10 machines.

The *Carthage (N. Y.) Tissue Paper Mills case* decreed that the grant of 1833 of " . . . a sufficient quantity of water to carry a pair of rollers to roll iron, and 15 machines to make nails " is 1000 inches of water. The head was 9

Digitized by Google

feet. An undershot wheel operated the rolls, and a tub wheel drove the nail cutters. The water decreed amounted to 166.67 cubic feet per second and gives 60 horse-power, when calling the average efficiency of the two kinds of wheels 35 per cent.

It is evident that in any old nail factory power was used, not only to operate the nail cutters, but to prepare the stock for cutting. Accordingly, a grant of water to operate a nail factory of a certain number of cutters, must include the muck rolls for the treatment of the iron, after it has left the puddle furnace, and the iron rolls for shaping the heated muck bars.

WATER RIGHTS OF CARDING AND FULLING MILLS

Brown deeded to Solon Stone certain lands " together with the privilege of taking the water . . . sufficient to carry *four carding machines and one fulling stock* " at Dexter, N. Y. (recorded Nov. 21, 1831, Liber H2 of Deeds, p. 232, Office Clerk of Jefferson Co.). The extent of this right has never been adjudicated. The property operated a flutter wheel (for the fulling mill, down to the early 1880's) and a 6-foot scroll-cased, flat-vaned, wooden, central-discharge water wheel (down to 1895 or 1898). The mill (1909) is in ruins. The head on the property is 13 feet. The effective head upon the two wheels was 12 feet. The central-discharge wheel had a throat of 2.28 square feet, and the flutter's throat was 3 square feet. Calling the coefficient of discharge 94 per cent for the central discharge and 81.25 per cent for the flutter wheel, they vented 60 and 78 cubic feet of water per second, respectively. With 40 per cent wheel efficiency for the central discharge and 20

Digitized by Google

per cent for the flutter wheel, the net powers of the wheels were 32 and 21 horse-power, respectively, or 53 horse-power total. This is at the rate of about 13 horse-power of wheel installation per single carding mill.

Brown leased from the Hydraulic Canal Co. in Oswego, N. Y., in 1827, sufficient water " . . . to turn and keep in operation such necessary machinery as " he should put in " . . . for the purpose of carding, spinning, and cloth dressing, provided " the amount used should not exceed that required " to turn one run of stones."

This lease has never been adjudicated. As already noted, a run of stones has been determined on the canal upon the opposite bank of the river in Oswego to be sufficient to yield 30.25 net horse-power with wheels of 80 per cent efficiency.

In the *Carthage Tissue Paper Mills case*, the axe-helve property was for a time operated to drive a carding mill (number of machines not stated) by means of a 7-foot central-discharge, scroll-cased, flat-vaned, wooden wheel, under about 8-foot head. This corresponds to about 25 net horse-power, wheel capacity, using 40 per cent efficiency.

Oliver Evans, 1795, Part V, p. 86, and Plate XII, also Craik, 1870, Fig. 42, give descriptions and illustrations of fulling mills.

Bourne says, that "In fulling cloth at Beauchamps, each piece being 220 yards long, 0.66 wide, and weighing 121 to 127 pounds, the fuller makes 100 to 120 strokes per minute; each piece requires two hours to full it, and the expenditure of 2 horse-power during that time" (Moore, 1880, p. 441).

Digitized by Google

WOOLEN MILLS

An indefinite water grant, sufficient to operate a woolen mill, is definite to the extent that the mill must have at least one full set of machinery. Such mills are rated in sets, as a one set, two sets, etc., relating to sets of complete mechanisms for converting raw wool into a finished, woven fabric. The power used per set varies with the kind and weight of cloth made, and its finish.

The Author made all-day tests at the following mills in Massachusetts and Rhode Island in 1895, to determine the power used. The variations in power per set are due to differences in sizes of mills and in the quality and character of the goods made. Most of these mills were from forty to sixty years old.

Mill.	No. of Sets.	H.p. Used per Set.
Collier	1	35
Newton Darling	2	30
A. W. Darling	2	30
Butler	2	18
Darling & Thayer	2	22
Mann Bros	3	20
Bottomly	4	27
Smith	4	13
Atlanta	4	26
Aldrich	4	26
Irving	5	25
Kent	6	22
Hopedale	6	33
Curtis	7	28
Olney	8	17
Calumet	8	22
Lippitt	11	27
Evans and Seagrave	12	17
Hecla	12	22
Riverdale	24	17
Blackstone	24	17

Digitized by Google

Ayres' 12-set blanket mill, Philadelphia, had an average day load of 201.6 horse-power on August 5, 1902, and 211 horse-power on January 28, 1918, or 16.8 and 17.6 horse-power per set, respectively. On the first test the loading was

Picker department	38.2 h.p.
Carding and spinning	61.1 h.p.
Weaving and finishing	33.3 h.p.
Friction of engine and shafting	69.0 h.p.
Total	201.6 h.p.

This load did not include lighting or the dye house. The friction constituted 34.2 per cent of the total load (Whitham's tests).

Glazier's 10-set mill at S. Glastonbury, Conn., producing men and women's goods, hat and cap cloth, etc., has an average load of 225 horse-power or 25 horse-power per set (Whitham, test in 1918).

Stott's four mills at Stottsville, N. Y., operated with one used for the finishing of the cloth made in the other three, were tested by the Author in 1904, the power measurements consuming two days at each plant. The mills had 44 sets of woolen machinery, or 12 sets at Mill 1, 15 sets at Mill 2, No. 3 Mill was used for dyeing, finishing, etc., and 17 sets at Mill 4. The Mills were located, Nos. 1 and 2 on the upper falls, No. 3 on the middle falls, and No. 4 at the lower.

The Stott Mills used a total of 773 horse-power, or 17.6 horse-power per set. They manufactured light-weight woolen dress goods. Some of the machines in use were over sixty years old.

Digitized by Google

As illustrating the mechanisms, Mill No. 1 had for its 12 sets the following equipment (it being remembered that the scouring and washing and dyeing of the raw wool, and the finishing of the goods were done at Mill No. 3 nearby); a burring picker; a mixing picker; a duster; 3 grinders; twenty-six 40 by 40-inch D. & F. cards; ten 48 by 40-inch D. & F. cards; ten 260 spindles D. & F. spinning mules; three 240 spindles D. & F. spinning mules; twenty-six 42-inch Reynolds looms; twenty-eight 70-inch Crompton looms, Dobby heads; 6 spoolers, etc.

The Allen Woolen Mills, near Rochester, had wheels of 75 horse-power capacity operating 4 sets of machinery in 1893 (Whitham).

The Keystone spinning mills, Philadelphia, has 34 sets of carpet yarn spinning machinery, using 14.7 horse-power per set. It has no weaving nor dyeing department (Whitham).

Leffel's "Wheel Book" of 1883, p. 123, mentions a turbine installation of 52 horse-power, said to operate a 6-set woolen mill with wheel gates half-opened. The mill must have had another source of power.

Moore, 1880, p. 559, gives 30 horse-power as driving 19 wool combers having a total of 350 rollers; 16 mules with 3400 spindles; a winder with 60 rollers to prepare the warp; 2 warping machines; 2 self-acting feeders; 100 power looms at 115 R.P.M.; 2 lathes for iron and wood; and a pump. It produced 13,600 cops of woolen thread of 45 cops per pound, each measuring 32 yards. The looms make daily four pieces of double width merino of 68 yards each, and four pieces of sample merino of 1.2 to 1.4 yards broad, and each 88 yards long.

Digitized by Google

Wells, 1869, p. 155, states that the power used in woolen mills is "at the average rate of one set to 8 net horse-power." This can apply only to very large mills.

Emerson, 1894, p. 100, gives 11.08 horse-power per set in Beebe, Weber & Co.'s 8-set woolen mill in Holyoke. He also, p. 154, gives 6.14 horse-power per set in the 22-set Woolen Mill at Vasselboro, Me., making light cassimeres; 7.5 horse-power per set in Walker's 4 set mill, Lowell, on flannels; 10 horse-power per set in Inman's 4-set mill on heavy doeskin, pants goods, at Pascoag, R. I.; and 8 horse-power in Beebee, Webber & Co.'s 8-set mill in Holyoke on pants goods. Emerson measured simply the net power at the machines.

Emerson, p. 156, gives a list of machinery in a 1-set woolen mill, while on pp. 155 et seq. he illustrates the various machines used. His list of machinery per set is, one wool and waste duster, which answers for 6 sets, as does the mixing picker; 3 cards per set, i.e., first and second breaker, and finisher; mules, 400 spindles per set; two spoolers; a dresser, reel and beamer for 6 sets; 5 broad and narrow looms per set; 2 fulling mills; a washer answers for 8 sets; a hydro-extractor is sufficient for 6 sets; 2 gigs; shears will provide for 4 sets; and a brusher answers for 6 sets as does also a press.

Fairbairn, pp. 467 et seq., describes the process of manufacture in a woolen mill, and on p. 472 he gives the speeds of the machinery.

Webber's test of 1871–1873 with a dynamometer gave net powers at the machines as follows, according to his "Manual for Power for Machines, Shafts, and Belts," pp. 50 et seq.:

Digitized by Google

	Horse-power.
Wool cards	1.27–0.91
Woolen looms	0.63–0.22
Fulling mill	2.54
Wool jacks	0.66
Gigs	2–0.51
30-inch hydro-extractor	1.82
38-inch hydro-extractor	2

In tests from 1874 to 1879 Webber found, pp. 56 et seq., net powers at the woolen machines of:

	Horse-power.
Cards	0.77–2.11
Spinning mule	0.97–1.55
Hydro, 60 inches	4.26
Rinser for fulling, 16 inches	2.84
Pickers	5.7–8.8
Looms 1 horse-power for	2.58–5.4
16-inch double fulling mill	3.08
108-inch broad gig, 48	1.52

Groat vs. Moat, 94 N. Y. 115, makes a 4-set woolen mill use 10 horse-power per set.

Leffel's "Wheel Book" of 1877 mentions 9 woolen mills aggregating 49 sets, having turbines averaging 10 horse-power per set.

A. F. Ordway, mill engineer and millwright, Beaver Dam, Wis., found a 4-set woolen mill in Wisconsin to use 98.6 horse-power, as determined with an engine indicator and a transmission dynamometer, in 1897, or 24.6 horse-power per set. The indicator checked the dynamometer.

The general operations or processes followed in a woolen mill are: 1. Sorting and washing. 2. Teasing and opening.

Digitized by Google

3. Carding, roving and spinning. 4. Warping, dressing and weaving. 5. Finishing, i.e., washing (over reels), fulling, washing (the reverse of fulling), gigging, passing over teasel cards, shearing and cutting (Fairbairn, p. 449).

" *Carding*—A process in which the staples and fibres of material are thoroughly disentangled and subsequently blended together so as to produce a film or sliver of material of a uniform character " (" Wool Year Book," 1913, p. 504).

" *Fulling*—An operation through which wool cloth is passed to increase it in thickness, density, and solidity, and also to improve it in handle " (Ibid., p. 517).

COTTON MILLS

Cotton mills are rated by number of spindles, rather than by sets of machines—as in the woolen trade.

The process of manufacturing cotton fabric is outlined by the late Jas. J. Fearon, of Philadelphia, as follows:

1. Open the cotton bales and
2. Pick the cotton.
3. Finisher breaker picker prepares the cotton into laps.
4. Cards, in the railroad head make cotton into a rope form called sliver.
5. Drawing frames receive the sliver and draw cotton down to a sliver of smaller draught to meet the particular size of the yarn desired. This may require a second drawing.
6. Slubbing machine receives this product and draws it into a thread and puts it onto bobbins.
7. In the speeders two or more bobbins are consolidated into a new thread, wound onto cone-shaped or onto old flanged bobbins.
8. Spinning frame's creel (creel is a frame holding any

Digitized by Google

number of bobbins or spools) draws and spins to desired yarn size.

9. Winders, where the yarn is put onto spools.

10. Slasher, to be sized and starched.

11. Beamer, to be arranged into desired number of threads for weaving.

12. Looms.

13. Finishing—cleaned, brushed, calendered, rolled, measured and baled.

Emerson, 1894, pp. 121 et seq., describes more fully the process of manufacture and gives illustrations.

Gregory's "Mechanics," 1806, p. 411, describes a yarn mill, while Buchanan's 3d "Essay on Millwork," 1809, pp. 11, 15, 33, 34, discusses the early changes in the mechanisms used.

Webber's "Power for Machines, Shafts and Belts," 1891, pp. 124–229, gives a historical sketch of the cotton industry and development in the United States up to 1876.

Cotton machinery was introduced into the United States in 1790, at Pawtucket, R. I., by Samuel Slater.

Abbott, 1835, p. 106, states that "1 horse-power is calculated, at a medium, to drive:

100 throstle spindles, with preparation, for cotton yarn twist: or

500 spindles, with preparation, for mule yarn, No. 48: or

1000 spindles, with preparation, for mule yarn, No. 110, and for intermediate yarn, in the same proportion; or

12 power looms, with preparation."

(NOTE. Abbott evidently copied this table from Buchanan's "First Essay on Millwork," 1808, p. 131, or from Grier's "Mechanic's Calculator.")

Digitized by Google

Abbott then gives the so-called " Lowell (Mass.) Standard," or

" Twenty-four cubic feet of water per second, 30-foot fall, has been found sufficient to operate 4000 spindles, with all the preparatory machinery, for spinning cotton yarn, about No. 30, together with the looms necessary to weave the same. The spindles in use at that place (Lowell) are all of the sort called ' dead spindles,' requiring rather more power to operate them than the common English throstle spindles alluded to in the above table. The difference in power required for the dead spindle is probably as 4000 to 4300 or 4400. Calling 4000 dead spindles equal to 4400 throstle spindles, the power required to operate them, together with the necessary preparatory machinery will be

Equal to that of	44 horses
144 looms (12 looms to the horse)	12
Horse-power	56 horses "

Note. Twenty-four cubic feet second, 30-foot head = 81.82 gross horse-power and is known in the cotton districts in New England as about 65 net horse-power, and is commonly termed a " mill power " (Whitham).

Abbott, p. 107, proceeds to justify his rule as follows:

24 cu. ft. sec. = 1440 cu. ft. min. =	90,000 lbs. min.
90,000 × 30-ft. fall =	2,700,000 ft.-lbs.
Deduct one-third for loss by friction and otherwise	900,000
Used	1,800,000 ft.-lbs.

Digitized by Google

1,800,000 ÷ 32,000 (Boulton & Watt's standard, p. 104) = 56.25 h.p.

Abbott states that at the Hamilton Mills, Lowell, the same quantity of machinery is operated by 60 cubic feet of water per second on a 12-foot fall. He then gives:

"The 56.25 horse-power required for the above mills would be sufficient to put in motion;

"56,000 mule spindles, with preparation, for spinning yarn as fine as No. 110, or

"10,000 mule spindles, for spinning yarn for warp and weft as fine as No. 48, together with

"400 looms to weave the same."

"It is partly a consequence of the great expense of power to operate throstle spindles, that the throstle twist commands a higher relative price in Manchester than yarn of the same fineness spun upon mules."

Leonard's "Mechanical Principia," N. Y., 1848, XIX, states that his power to operate cotton machinery was obtained by comparing the water wheels of factories with the machinery equipment—and is an estimate, rather than a test or measurement. On pp. 19, 20, he states, that "Dead and ring spindles (cotton) frames turn off about 25 per cent more than the mule when spinning filling; as filling is about half of the whole production of the factory; the increased production when the filling is spun on the mule will be about 12 per cent, hence there will be about 12 per cent more attendant machinery for a given number of spindles, including looms; will require about two-thirds of the whole power; hence the increased power due by direct proportion is about 8 per cent; it will be safe to allow

Digitized by Google

7 per cent. The power required to spin a given amount of filling on a frame will exceed the power required to spin the same on the mule about 25 per cent; since the spinning requires one-third of the whole power, . . . "

Leonard, p. 21, states, "It will be noticed that this table is calculated for mules and frames; if the filling is spun on the ring or dead spindle frame, add about 12 per cent to the attendant machinery; if the filling and warp is spun on the Danforth frame add 40 per cent to the attendant machinery."

Leonard, p. 64, discusses the cotton machinery which may be operated in a mill building, three stories high, containing spinning frames, looms, and attendant mechanisms. His table gives the lengths of the building, per 1000 spindles as follows:

40 feet wide by 42 feet long; 42 feet wide by 40 feet long; 44 by 38 feet; 46 by 36; 48 by 34; 50 by 33; 52 by 32; 54 by 31; and 56 feet wide by 30 feet long. The average is 5 square feet of floor space per spindle.

Example: A cotton mill 50 feet wide, 4 stories high, is to have 6000 spindles. What is its length by Leonard's table?

For 3 stories, 50 feet wide, the length is 33 feet for 1000 spindles, or 198 feet for 6000.

But the mill is 4 stories, rather than 3, high, hence the length is three-fourths of 198 or 148.5 feet, or say 150 feet.

Cramer's "Useful Information for Cotton Manufacturers," 1906, Vol. 3, p. 1169, gives a table showing the floor space in square feet per spindle as used in

Digitized by Google

seven modern cotton yarn and in forty modern cotton spinning and weaving mills built in various parts of the United States and making various classes of goods, from which it appears—

Cotton yarn mills use 3.24 to 4 square feet per spindle with an average of 3.60 square feet.

Cotton spinning and weaving mills used from 3.12 to 7.15 square feet per spindle with an average of 5.03 square feet, or the same as given by Leonard, in 1848.

Leonard's table of power for cotton machinery, p. 66, may be abstracted as follows, the power relating to 1000 spindles, or multiples thereof in proportion:

Yarn.	Calculated H.p.	Actual H.p.
Frame Spindles:		
Nos. 10–20	19	14¼
20–30	17	12¾
30–40	16	12
Mule and Frame Spindles:		
Nos. 10–20	17	12¾
20–30	15	11¼
30–40	14	10½
Mule Spindles:		
Nos. 10–20	16	12
20–30	14	10½
30–40	13	9¾

Example: The power to drive 6000 mule spindles on No. 36 yarn, including the driving of the looms is $6 \times 13 = 78$ horse-power calculated, or $6 \times 9.75 = 58.5$ actual horse-power per Leonard's table.

Leonard, p. 76, gives a table for the Attendant Cotton Machinery in plants of from 1000 to 10,000 spindles, from which is abstracted his figures for a 1000 mule and frame spindle equipment as follows:

Digitized by Google

Size of Yarn No.	5 to 10	10 to 20	20 to 30	30 to 40
Willowers	1	1	1	1
Pickers, 2 beaters	1	1	1	1
Single, 30-inch cards	12	8	8	6
R. R. Heads	2	2	1	1
3 head draw-frames	2	2	1	1
Speeder spindles	64	12	10	10
Fine spindles	64	50	40	38
Mule and frame spindles	1000	1000	1000	1000
Spooler spindles	28	28	28	28
Warpers	1	1	1	1
Dressers	1	1	1	1
Looms	24	28	28	25

The operatives required in a cotton mill are given by Leonard, p. 84, as follows:

Spindles.	Yarn Number.							
	5	10	15	20	25	30	35	40
1,000	36	35	33	30	30	39	27	26
2,000	72	69	66	63	60	57	54	52
3,000	108	103	99	94	90	85	81	78
4,000	144	138	132	126	120	114	108	104
5,000	180	172	165	157	150	142	135	130
6,000	216	207	198	189	180	171	162	156
7,000	252	241	231	220	210	199	189	182
8,000	288	276	264	252	240	228	216	208
9,000	324	310	297	283	270	256	243	234
10,000	360	345	330	315	300	285	270	260

Thus for 2000 spindles on goods of No. 20 yarn, 63 hands are required in the mill.

On Jan. 1, 1849, the Glasgow Cotton Mills, at South Hadley, Mass., received a grant of water sufficient to operate 10,000 cotton spindles making No. 14 yarn together with machinery to convert it into finished cloth. It was

Digitized by Google

the understanding that 25 cubic feet of water per second, used in a turbine under 30-foot head, would drive 3584 spindles on No. 14 yarn and the weaving machinery, according to the Lowell standard of 1849, and it is called a " mill power," or 65 net horse-power. Hence 1 horse-power drove 55 spindles on No. 14 yarn.

The Oswego Cotton Mills in 1852 (per " Directory and Compendium ") had 2436 spindles, 71 looms, 60 operatives, and used 230,000 pounds of cotton and produced 625,000 yards of 36-inch sheeting in 1851. It had, per lease of 1835, " water sufficient to turn 4 runs of mill stones and the usual machinery connected therewith . . . ." This lease was not definite as to the quantity of water leased, and it has never been adjudicated. On the Varick canal, on the opposite bank in Oswego, the courts decreed that a run is sufficient water to produce 30.25 net horse-power with wheels of 80 per cent efficiency. On that basis this mill had a horse-power of water for 20 spindles used on coarse sheetings.

Haswell, 1854, p. 179, gives the Rocky Glen Cotton Mill, at Fishkill, N. Y., as having 6144 self-acting mule spindles; 160 looms on print goods, 27 inches wide, No. 33 yarn (33 hanks to pound) and producing 2400 hanks in eleven hours. The machinery was driven by a high breast wheel 24 feet 4 inches diameter by 20.75-foot face, with 70 buckets 15.75 inches deep, the total fall being 20 feet, divided into 4 feet for the head and 16 feet for the fall, and supplied by a gate giving an opening 20 by 2 feet. Wheel made 4.5 R.P.M.

Such wheel produces about 180 net horse-power, which would give 1 horse-power to about 34 spindles. A con-

Digitized by Google

siderable part of the work done by this slow wheel was, no doubt, absorbed by the drive.

According to *Groat vs. Moak*, 94 N. Y., 115, the cotton mill there described drove 33.6 spindles per horse-power. The mill was 98 by 48 feet, 5 stories, and its machinery consisted of 3360 spindles and 80 looms. The court fixed 100 horse-power as required to drive the mill. According to Leonard's rule the building was adapted to 4800 spindles.

An old grant at Little Falls, N. Y., for the Whitman Cotton Mill, which had 4032 "spindles on No. 29 yarn" and the necessary machinery for converting cotton into cloth, was construed to require with the mill friction proportioned among the several machines:

	Horse-power.
1 bale opener	2
1 hopper feeder with opener and single.	4
1 two-beater finishers	5
1 thread extractor, hard ends	¼
8 revolving flat cards, 50-inch cylinders	5½
1 set drawing frames, 27 deliveries	4
1 slubber frame, 66 spindles	1¾
2 intermediate frames, 88 spindles each	2
18 ring spinning frames, 4032 spindles	49½
6 roving frames, 112 spindles each	7½
1 winder, 200 spindles	2
2 beaming frames or warpers	1
1 sizing machine or slasher	2
125 looms, on No. 29 fine yarn	37½
Total, including shafting	124

Digitized by Google

The spindles on No. 29 yarn per horse-power are estimated at 32.5 for this Whitman mill (Whitham, Crosby).

Baird's "American Cotton Spinner," 1860, p. 46, gives the same power table as has been noted on p. 101, for Abbott, Buchanan and Grier, with slight modifications, or 1 horse-power drives

100 throstle spindles on No. 25 yarn twist, including necessary preparation, or

250 mule spindles, with preparation, on No. 25 yarn filling, or

500 mule spindles with preparation on No. 60 yarn filling, and for intermediate numbers in preparation, or

12 power looms, with warping, sizing, etc.

Wells, 1869, p. 155, allows from 30 to 100 spindles to the horse-power, or 60 as an average.

C. T. Main, M.E., usually figures on 40 spindles to a horse-power (1899). Emerson, p. 120, allows 50 per horse-power as an average. Whitham found 37 per horse-power, as noted on page 100.

Fairbairn's " Mills and Millwork " (written before 1860), p. 454, of 1878 Ed., gives a history of the changes in the cotton mills construction " during the past thirty years," and particularly in the arrangement of the machinery in the buildings. On p. 456, Fairbairn described a cotton mill for India, with engines of 600 indicated horse-power. On p. 464, he gives the speeds of the various machinery in this Indian mill.

Lister's " Cotton Manufacture," 1914, explains in detail the difference between throstle, ring and mule spinning, and the meaning of sliver, slubbing, etc.

Moore, 1880, p. 559, describes an English mill with

Digitized by Google

22,060 "hand-mule" spindles and 260 looms, using 125 engine horse-power or 1 horse-power to 176.5 spindles. He gives 1 horse-power to drive 305 hand-mule spindles, with preparation; or 230 self-acting spindles, with preparation; or 104 throstle spindles, with preparation; or 10.5 looms with common sizing.

Including preparation, 1 throstle = 3 hand-mule = 2.25 self-acting spindles.

Exclusive of preparation, 1 throstle = 3.5 hand-mule = 2.56 self-acting spindles.

Average breadth of looms is 37 inches, making 123 picks per minute (Moore).

Webber, pp. 12–48, gives dynamometer tests of the power used by and at cotton machines, covering a period from 1871 to 1873. His results do not include the friction of transmission due to shafting and belting. The tests are summarized in the table on page 98.

Webber, p. 79, found that of the 609.31 net horse-power made in a heavy sheeting mill, with an average yarn of 12.75, 33 spindles were used to the horse-power, and the division of power was

Picking and carding, 29.62 per cent; spinning, 48.02 per cent; dressing, 4.58 per cent; and weaving, 17.78 per cent. He added only 15 per cent to the net power for shafting friction of the mill.

On p. 80, Webber gave data as to a mill on denims, ticks, etc., with an average of No. 11 yarn, and using 35.9 spindles per horse-power.

On p. 81, Webber found that a mill on fancy pantaloonery, shirting, stripes, etc., with No. 16.5 average yarn, used a horse-power for 43.77 spindles.

Digitized by Google

Machine.	H.p. Range per Machine.	Range of Spindles per h.p.
Cotton openers	12.5 -1.6	
Cotton pickers	12.4 -3.0	
Cotton openers and lappers	16.1 -3.9	
Cotton cards	9.2 -1.9	
Railway heads for cards	2.5 -0.23	
Cotton drawing frames	1.9 -0.47	
Dead spindle roving frames	1.9 -0.84	23.3- 62.5
Roving frames	2.2 -0.65	28.8- 68
	3.0 -0.79	25.3- 60.9
	2.1 -0.59	45.0-120.
	2.8 -0.46	50.0-276
Throstle dead spinning	2.0 -0.78	64.0-164
Ring spinning	2.7 -0.87	83.0-147
	2.8 -0.77	54.0-167
	3.4 -1.61	60.0- 83
Sawyer spindle, ring spinning	1.63-0.38	78.5-340
	1.53-0.76	116.0-169
Rabbath spindle, ring spinning	1.38-0 95	114.0-169
Pearl spindle, ring spinning	1.29-0.95	134.0-141
	1.75-1.27	107.0-138
Birkhead spindle, ring spinning	1.52-0.94	105.0-139
Richardson spindle, ring spinning	1.96-1.05	106.0-199
Excelsior spindle, ring spinning	2.26-0.59	88.0-344
	3.19-0.58	64.0-228
Perry spindle, dead, ring spinning	1.82-0.57	78.5-226
Pusey spindle, dead, ring spinning	2.22-0.74	67.0-156.2
Mule spinning	3.7 -1.26	153.0-382.5
Cotton looms	.....	17-5.1 looms to h.p.
Cotton spoolers	0.53-0.17	
Cotton twisters	2.3 -0.67	
Cotton warpers	0.17-0.11	
Cotton dressers	2.14-1.14	
Slashers	1.58-0.70	

In another mill, p. 82, Webber found that No. 26 average yarn on fine sheetings used a horse-power to 70 spindles; while still another mill with 32 yarn, same goods, used a horse-power for 66.6 spindles.

On fine shirtings and cambrics, No. 33 yarn, 66.3 spindles

Digitized by Google

were used per horse-power; Mill G on 33 yarn for corset jeans used 62.5 spindles per horse-power; Mill H on 31 yarn, print cloth, mule spinning, used 72 spindles per horse-power; Mill I, No. 32 yarn, print cloth, mule spinning, 76.7 spindles; and Mill K, 49 yarn, fine cambrics, used 75.6 spindles per horse-power.

In all of these mill tests Webber ascertained the power used by each machine separately, took their aggregate, and added only 15 per cent for the mill friction. (This 15 per cent is entirely too small, Whitham.)

In 1888, Emerson, p. 62, of 1894 Ed., found that 19.31 horse-power drove a knitting mill at Elkhart, Ind., having two 48-inch cards; 3 jacks, in all 720 spindles; 2 Parker twisters, 96 spindles each; 4 spoolers, dusters, dryer and fan; stocking dryer and fan; kulp winders; hydro-extractor; and 60 knitting machines.

On p. 120, Emerson gives 1 horse-power to 50 spindles as a " fair average estimate," and states that this rule also holds for silk mills. He gives from 35 to 50 spindles in a mill per loom used.

Emerson, p. 128, found 10.61 net horse-power driving a ribbon and webbing mill having 73 tape looms, etc.

Emerson, p. 129, found at the Nelson Cotton Mill, Winchendon, Mass., on denims, sheetings, and colored goods, that 4 pickers used 28.70 horse-power; 64 cards used 40.64 horse-power; 2 drawing frames used 31.61 horse-power; 180 looms used 18.52 horse-power; and the shafting (24.8 per cent of the total load) was 39.33 horse-power; total 158.80 horse-power. The mill had 7300 spindles, or 46 per horse-power.

Emerson tested at Natick, R. I., in 1874 (p. 129), 10,364

Digitized by Google

mule spindles and other machinery for making print goods, using 263 horse-power or 39 spindles per horse-power.

At Putnam, Conn., in a mill with 5632 frame and 6768 mule spindles, 200 horse-power drove the mill, or 1 horse-power drove 62 spindles (Emerson, p. 129).

A Janesville, Wis., cotton mill operated 330 sheeting looms and preparation with a 539 horse-power New American turbine.

The Author has determined the power in the twenty-three cotton mills named in the following table at sundry times since 1896. The mills were on various fabrics and yarns.

Mill.	Place.	Spindles.	H.P. Used.	Spindles per h.p.
Millbury.....	Millbury, Mass.....	12.842	275	46.7
Cordis.....	Millbury, Mass.....	6,800	257	26.4
Sutton.....	Wilkinsonville, Mass.....	16,000	325	49.2
Saunders.....	Saundersville, Mass.....	13,000	325	40.0
Fisher.....	Fishersville, Mass	35,864	1,000	35.9
Farmersville...	Farmersville, Mass.....	15,680	250	62.6
Whitin.....	Rockdale, Mass.....	50,000	1,500	33.3
Blackstone....	Blackstone, Mass.....	43,436	1,250	34.8
Ballou.....	Woonsocket, R. I.....	16,000	365	43.9
Globe.....	Woonsocket, R. I.....	42,160	1,200	35.1
Eagle.....	Woonsocket, R. I.....	14,000	380	36.9
Clinton.....	Woonsocket, R. I.....	24,500	700	35.0
Hamlet.....	Woonsocket, R. I.....	17,357	450	38.5
Mannville.....	Mannville, R. I.....	95,000	2,100	43.3
Albion.....	Albion, R. I.....	32,832	800	41.0
Ashton.....	Ashton, R. I.....	41,920	860	48.7
No. 4.....	Lonsdale, R. I.....	46,954	1,000	47.0
No. 1.....	Lonsdale, R. I.....	19,136	416	46.0
Albion.....	Valley Falls, R. I.....	42,640	1,000	42.6
Hamilton (1)...	Lowell, Mass.....	119,000	2,400	49.6
Appleton (2)...	Lowell, Mass.....	52,000	2,500	20.8
Tremont Suffolk (3).....	Lowell, Mass.....	181,618	6,784	26.8
Lyman.....	Holyoke, Mass.....	99,656	2,079	47.9
Total and averages		1,038,395	28,216	36.7

(1) Prints; (2) naps and cotton flannels; (3) various.

Digitized by Google

It is to be observed that textile machinery of all kinds is now operated at speeds thought to be impossible forty years ago. The first important speeding was in 1870–1880, while greater speeds are used to-day than in 1890. Increased speeds mean more power expenditure per spindle. In 1849, the Glasgow Mill at S. Hadley Falls, Mass. (see p. 93) was allowed 55 spindles per horse-power on No. 14 yarn, while Webber found only 42 spindles to the horse-power on this yarn in his tests of 1870–1880, showing the change in thirty years due to speeding the machines.

Howard and Bullough, Whitin Machine Works, and other manufacturers of cotton machinery publish tables showing the net power claimed to be required to operate the various machines in mills of to-day. Such tables are useful in proportioning the mill *provided a good margin is allowed* in the power plant installation.

"The friction load of the shafting, belting, etc., is not to be lost sight of in making power calculations and varies from 15 per cent. to 25 per cent. in modern mills, even 35 to 40 per cent. being by no means unheard of in old mills" (Cramer's "Useful Information for Cotton Manufacturers," Vol. 3, p. 1158).

"It is not out of place to call attention at this point to a phase in the general subject of power required to drive. . . . I refer to the well-known fact of the increased power required at times to start up machinery when it is cold, this being particularly noticeable on Monday mornings."

"Nor is it necessary to more than call attention to the simple fact that the power required to drive machinery depends upon its cleanliness, its being set level or plumb—its alignment. Tables . . . are on a basis of machines being

Digitized by Google

properly set, oiled, cleaned, and otherwise cared for" (Ibid., p. 1161).

PLASTER MILLS

In 1852, Ames operated a mill in Oswego, N. Y., producing 20,000 barrels of "water lime" per year and 20,000 barrels of plaster. He employed 15 hands.

In 1870, Williams, at Ithaca, N. Y., used a 45 horse-power Leffel wheel to drive a stone cracker in a plaster mill and a run of 57-inch stones, and accompanying machinery, for grinding the cracked stone into plaster. The product was 1 ton per hour. He stated that the wheel operated at half gate.

Dewey and Stewart, Owosso, Mich., 1864, had a 38 horse-power Reynolds turbine, which they claimed would grind 3 tons of plaster per hour.

PAPER MILLS

Wm. Rittinghuysen (now Rittenhouse), of Holland, built the first paper mill in America at Roxborough, near Philadelphia, on paper mill run, in 1690, using linen rags and flax products as a stock. The first mill in New England was at Milton, Mass., 1730. In 1750, "beaters" were invented, in Holland, to "commingle rags into paper pulp." In 1751, experiments were made for producing paper from "suitable vegetables—as a substitute for rags." In 1756, straw was used as a substitute for rags. In 1774, chlorine gas was used for bleaching the paper stock, in place of exposure to sunlight. In 1798, Robert of France invented

Digitized by Google

" a way to make, with one man and without fire, by means of machines, sheets of paper of very large size, even 12 feet wide and 50 feet long," and a patent was granted in 1800. This was the beginning of paper making " in the web on endless wire cloth." Two Englishmen, Henry and Sealy Fourdrinier, aided by the engineering skill of Bryan Donkin, "built and set up the first 'Fourdrinier' machine at Frogmore in 1803, consisting of what is known as the ' wet end ' of a machine." In 1801 Koop discovered a method of extracting ink from old papers and using them for new paper stock. In 1809, Dickinson, of England, invented the "cylinder machine" which competed with the Fourdrinier " Instead of a traveling wire cloth," Dickinson " conceived the plan of a polished, hollow brass cylinder, perforated with holes and covered with wire cloth, which revolved over and just in contact with the prepared pulp, sucking up the water by rarefaction and leaving the filaments sufficiently strong to be carried by the usual process to completion." In about 1820, the first paper machine was introduced into America, probably at Gilpin's mill on the Brandywine. In 1821, Crompton, of England, patented cylinders for drying and finishing the paper, and shears to cut the paper into sheets. Causon, of France, applied the suction box of Dickinson to the Fourdrinier machine in 1826. Crompton and Miller patented the slitter in 1826. Ibotson, of England, introduced screens to separate " knots from paper stuff " in 1830. The dandy roll was invented by Wilks in 1830 " to facilitate the escape of water from the pulp-web, previously to its being subjected to the pressing rolls." In 1830, Dickinson patented " a mode of making paper in two layers or strata which were brought together on a second cylinder "

Digitized by Google

thus making cardboard. In 1820, Gilpin patented calenders to finish the paper's surface (Hardy's "Landmarks in Paper Making").

Nicholson's "Operative Mechanic and Machinist," 1826, p. 366, speaks of the cylinder in the "washer" and also in the "beater," turning at 120 to 150 R.P.M. He states that the Fourdrinier machine had already replaced the hand sieve in forming the sheet. On p. 369 Nicholson says, "The quantity of water which a paper mill can command to turn its engines, generally limits the extent of its trade."

Oliver Evans, 1795, Part I, p. 121, gives, "The engine of a paper mill, roll 2 feet diameter, 2 feet long, revolving 160 times in a minute, requires power equal to a 4-foot stone grinding 5 bushels (of wheat) per hour." Evans probably referred to a beating engine with a 2-foot roll, 2 feet long, cutting rag stock, and using 12 to 15 horse-power.

Gregory's "Mechanics," 1806, II, 190, gives a paper mill using 1 ton of old rope per week, expending 300 pounds at 390 feet per minute, or 3.54 horse-power, the mill operating from ten to twelve hours per day. He gives the equivalent of 4.77 horse-power when 2 tons of rope stock are used. This power is a theoretic deduction by Prof. Gregory, and evidently relates to the work in the beater.

Emerson, 1894, p. 62, gives 67.11 as the power used in 1888 at Elkhart, Ind., by 4 beaters, washers, Jordan, pumps, paper machine, rag cutter and duster, the product being 1 ton per day of tissue paper at the Globe mill.

On p. 171, Emerson gave 55.36 horse-power as the maximum power required to operate four beaters in a 4-ton mill on manilla papers, using jute stock.

Digitized by Google

On p. 177, Emerson gave 258 net horse-power as used at No. 1 Whiting mill, at Holyoke, for the production of 4 tons per day of fine writing paper, or 65 horse-power per ton.

On pp. 177–178, Emerson gives the following for the Housatonic mill of Smith Paper Co., Lee, Mass.: 800-pound beaters on rag stock, 40-inch roll, 46 inches long, 15.25 horse-power; 300-pound beater on rag stock, roll 28 by 33 inches, 9.25 horse-power; 62-inch paper machine at 61 feet minute, 8.9 horse-power, and at 78 feet minute, 10.8 horse-power; the auxiliaries to the machine used 4.1 horse-power.

On p. 178, Emerson gave a 500-pound rag beater at the Holyoke Paper Co.'s mill as using 80 horse-power. At Fitchburg, Emerson found that three 450-pound beaters (one used as a washer) and attached machinery used 49 horse-power. On page 179, a 450-pound beater is given as using 13 horse-power.

The Pejepscott Paper Mills, Maine, used 3500 horse-power of Risdon turbines driving 14 pulp wood grinders, at 200 R.P.M., and producing 66.5 tons of ground wood pulp per day, or 1 ton per 53 horse-power (about). Whitham's tests at Fulton, Dexter, and Carthage, N. Y., gave a ton of ground spruce wood pulp per day of twenty-four hours by expending from 60 to 65 horse-power (1913–1918).

Brownell, Ercildown, Pa., 1883, gave a 58-horse-power Leffel wheel as operating three 600-pound beaters, 36-inch roll, one 60-inch board machine, a pair of calender rolls, and a centrifugal pump.

Bartley, p. 34, of "Wheel Book," 1886, gives 10 horse-

Digitized by Google

power for a 350-pound beater, and 15 horse-power for 500 pounds.

The old Farrah " Sunny Dale " paper mill was built in 1815, and burned in 1850. It was immediately rebuilt, and is still operating (1916). It is on Beaver Creek, a tributary of the Brandywine. It has a 24-foot overshot wheel, 5 feet clear width, with buckets 10 inches deep, spaced 12 inches. The head is 33 inches. The sluice gate, 4.5 feet wide, is usually lifted from 6 to 8 inches. The wheel makes about 7 R.P.M. The power is about 55 horse-power. The mill operates a rope cutter, and a 300-pound beater-washer. The 36-inch cylinder paper machine is operated by a 12-horse-power steam engine. There is a stationary ragboiler. The product is 20 reams of tissue paper, or 200 pounds per twenty-four hours. The total power is about 67 horse-power (Hanby).

The Crane upper and lower mills, Westfield, Mass. (1911), used 500 horse-power of turbines and engines to produce 4 tons of fine writing paper per day from new, bleached linen collar and shirt trimmings (Whitham).

The Worthy paper mill, Mittineague, Mass. (1911), produced 4 tons of bond and ledger paper daily with 336 horse-power using rags and sulphite stocks (Whitham).

Mittineague mills 1 and 2 (1911) made 14.8 tons of fine writings daily with 1520 horse-power using cotton rags (Whitham).

The Collins mill, at N. Wilbraham, Mass., 1902, made 7 tons of fine writings daily, from rags and sulphite, with 790 horse-power (Whitham).

The grant of 1818 to Caswell, at Watertown, N. Y., was a lot 66 feet wide and water " sufficient to carry a paper

Digitized by Google

mill." The amount of water thus granted has not been determined. A subsequent owner, in 1853, sold half of the water rights, defining this half as 4 runs of stones.

It is probable that this 1818 mill had a rag duster and cutter, a small beater (used also as a washer), pumps, hand sieves for forming the sheets, and a power press. The shafting was no doubt costly in power. The wheels available for use at the site and time were inefficient. No doubt there are many such indefinite paper grants requiring adjudication.

WATER RIGHTS OF A FLAX OR LINSEED OIL MILL

Fred. C. Rogers for twenty years operated probably the last country oil mill in New York, or down to 1892. It was on Oatka creek, about 1.5 miles south of LeRoy. The mill operated by a 48 and a 39-inch Rose wheel, 7 foot-head, 40 horse-power, total rating.

In the operat on of the mill a continuous stream of flax seed (weighing 56 pounds per bushel) fed a pair of 8 by 8 inch metal-crushing rolls, which flattened, but did not grind the seed, and took about 5 horse-power.

The crushed seeds were fed to the grinder, or chaser, consisting of a flat, stationary stone, over which revolved a heavy edge stone, or grinder, traveling around a vertical shaft, and revolving in a vertical plane. It used from 7 to 8 horse-power.

The ground seed was then fed into an oven, having agitators, where it was cooked. The agitators took about 3 horse-power.

The cooked oil meal was then put into a hydraulic

Digitized by Google

press, 70 pounds or 1.25 bushels at a time, and pressed to a final intensity of 400 tons to the square inch. This removed the oil. The press took about 8 to 10 horse-power. The oil cake, or residue, was broken and ground in a steel mill using from 12 to 15 horse-power. The mill used from 35 to 40 horse-power and handled about 2.5 bushels per hour, yielding about 2 gallons of linseed oil to the bushel.

Fairbairn's " Mills and Millwork," 1878, 4th Ed., p. 506, gives an excellent description of an oil mill. This book was written in 1841 (p. 573).

Tomlinson, London, 1854, in his " Cyclopædia of Arts," p. 332, Vol. II, illustrates an oil mill, as does, also Knight's "Amer. Mech. Dict.," 1876, II, 1550.

Moore, 1880, p. 441, gives 6000 pounds for the weight of the edge runner or grinder in an oil mill, turned about a central vertical shaft at 10 R. P. M. He fed 55 lbs. of seed every ten minutes, and thus crushed 3300 pounds per twelve hours, producing 1320 pounds of oil. He gives only 2.72 horse-power as being expended, which is wrong, as is evident from a study of Rogers' mill.

Beardmore, p. 20, quotes Rennie's test of a water wheel at an oil mill. The fall was 15.5 feet; the rim speed of the wheel 270.5 feet per minute; diameter, 16 feet; breadth 2.5 feet; buckets 9 inches deep; the head gate was opened 18 by 4 inches; and 194.4 cubic feet of water per minute was used, producing 5.73 " nominal " horse-power.*

Wait, 1871, gives his No. 27 Champion turbine, 6-foot head, 5.9 horse-power to run a " flax mill."

* A " nominal " horse-power is indefinite, meaning one thing at one time or place and something quite different at another. So far as the Author has been able to identify it, a nominal horse-power is from 2.5 to 7 actual horse-power. (Molesworth, p. 483; Fairbairn, p. 456).

Digitized by Google

PART TWO

ORIFICE OR APERTURE GRANTS OF WATER POWER

THERE are many aperture grants of water rights. Thus, at Cohoes, N. Y., a " mill power " was formerly 100 square inches of water taken through " an aperture in a thin plate, 50 inches wide by 2 inches deep, and under a head of 3 feet from the surface of the water to the center of the aperture." In 1859, experiments gave 5.9 cubic feet per second discharge. This was agreed upon, by the contracting parties, as 6 cubic feet second, as a new standard, which, when used under 20-foot head, is known as a " mill power," or 13.63 gross horse-power, or 10.91 net horse-power with 80 per cent efficient wheels. The annual rental for such a mill power was $200 per year, including the site of the mill. The coefficient of discharge was found to be 62 per cent (" 10th U. S. Census, 1800, Part I, 366").

The water power company at Windsor Locks, Conn., chartered in 1824, leased the flow through an orifice of 1 square inch, in a thin vertical plate, under a 30-inch head at $2.50 yearly rental. The contraction being complete, the discharge is 0.05425 cubic foot second, which, under a head of 20 feet, amounts to 0.123 gross horse-power. The coefficient of discharge is 62 per cent. The heads at Windsor Locks range from 30 to 27 feet (*Ibid.*, 219).

Digitized by Google

At Unionville, Conn., developed 1830, the original leases were for a square foot aperture under a certain head. The lessors claimed that the aperture should be standard, i.e., with sharp edges, while the lessees claimed that the edges should be rounded. At this place there are two 18-foot canal levels, or 36 feet total fall. A "mill power" is $7\frac{1}{2}$ cubic feet per second under 18 feet, or 15.34 gross horse-power (*Ibid.*, 246).

At Birmingham, Conn., the water grants were for a rectangular aperture of 144 square inches with a head of 12 inches above its center. This is called 5 cubic feet second, and was sold for twelve hours per day, six days per week, under the head of 22 feet, so that a mill power there is $12\frac{1}{2}$ gross horse-power. The coefficient of discharge is taken as 62.5 per cent. The first or permanent water was sold for $250 yearly rental, and the first surplus $100 (*Ibid.*, pp. 312–318).

At Ansonia, Conn., a mill power was the flow through an aperture of 1 square foot, under a 30-inch head, and amounts to 30 gross horse-power under 33 feet. It was leased for $600 yearly rental for permanent, and from $250 to $500 rental for surplus powers. The coefficient of discharge is 62 per cent (*Ibid.*, pp. 318, 319).

At Dexter, N. Y., several aperture grants were made, in the early days, the apertures being 3 feet square, or fractions thereof. A recent decision * on these grants found that—

"Where a grant has been held to be of so much water as would pass through a prescribed aperture under all the head

* *Dexter Sulphite Pulp and Paper Co., vs. Jefferson Power Co., et al.*, 179 N. Y., A. D., 332.

Digitized by Google

available, a judgment requiring defendant to take such water through a standard rectangular aperture of metal with square edges, which was to open into a well-secured and tight flume or bulkhead, was proper, since the grant was not capable of interpretation in terms of a constant flow of a given amount of water, because it fixed no definite head, and the effect of the prescribed aperture would regulate the flow to the defendant's whee's accordingly, the aperture being a standard orifice the character of which was presumably known to hydraulic engineers at the time when the grant was originally made to the defendant."

This Dexter decision means that the owner of the aperture grant must make the aperture standard, with sharp edges, and without ajutage effect. He may draw such waters through this standard aperture for use by his wheels as is practicable at his mill.

The *Schuylkill Navigation Co. vs. Moore*, 2 *Wharton*, 477, tried in 1837, related to " the privilege of drawing from the canal . . . so much water as can pass through two metallic apertures, one of 50 square inches, and the other 250 square inches, respectively, under a head of 3 feet, to be measured from the middle of each of the said apertures, respectively, to the face of the water of the said canal . . .

" The defendant applied to the aperture a certain conical tube, called an *ajutage*, by which the flow of the water was enlarged. It appeared that this invention was known to persons conversant with hydraulics, and to some of the officers of the Navigation Company before the making of the contract. *Held* that the true construction of the contract was, that the water was to be drawn in the ordinary way, and that the defendent had no right to increase the

Digitized by Google

flow by means of an ajutage." These were water grants of 1828, at the rate of $6 per inch of aperture.

"*Ajutage,* a tube fitted to the mouth of a vessel for the purpose of modifying the discharge of water." (Appleton's Dict. of Mechanics and Engr., 1852)

" If a cylindrical orifice is in a partition whose thickness is equal to two and one-half or three times the diameter of the orifice; or if the orifice is a tube of length equal to from two and one-half to three interior diameters, then the orifice is termed a short tube, or *ajutage.* The sides of short tubes may be parallel, divergent, or convergent." (Art. 225, Fanning.)

An aperture grant, unless otherwise qualified, means that the water is to be taken through a standard orifice of the size defined or prescribed, the edges being sharp, no adjutage effect obtaining, and the discharge coefficient being about 62 *per cent.*

Ajutage effect has been well known for at least nineteen hundred years, having been illegally used by the Romans for increasing the flow of water (Eubank, also Herschel's " Frontinus ").

To avoid ajutage effect, or " To secure complete contraction the orifice should be placed at a distance from the sides and bottom of the tank not less than three times the width of the orifice; and in order that the effect of the velocity of approach may be inappreciable the area of the orifice should not exceed one-twentieth of the cross-section of the tank " (Turneaure and Russell's " Hydraulics," 1901, p. 216).

Digitized by Google

COEFFICIENT OF DISCHARGE THROUGH STANDARD ORIFICES

A standard orifice is one with square, sharp edges in which ajutage effect is suppressed. " An orifice so formed that the escaping liquid only touches its inner edge is termed a *standard orifice*, and, on account of the regularity of the results given by such orifices, they are used wherever practicable, for the measurement of water. The object to be attained by a ' standard orifice ' is to reduce the surface of contact of the jet with the vessel as nearly as possible to a line, and this result is attained—either by making the orifice in a thin plate or by leaving the inner edge a sharp corner and beveling the outer edge of the orifice" (Alger, pp. 92–95).

" The standard orifice " is defined " to signify that the opening is so arranged that the water in flowing from it touches only a line, as would be the case in a plate of no thickness. Generally the head of water on an orifice is at least three or four times its vertical height" (Merriman, 1900, art. 34).

The coefficients of discharge for standard *circular orifices* are given as follows:

	Per Cent.		Per Cent.
Castel	61.7–67.3	Ellis	57.3–61.5
Marietti	69.2	Weisbach	61 –61–5
Eytlewein	61.8	Bossut	61.9
Michelotti	60.7–61.9		

The coefficients of discharge for standard *square orifices* are given as follows:

Digitized by Google

	Per Cent.		Per Cent.
Michelotti	60.2–61.9	Lesbros	57.2–60.5
Bossut	61.6	Smith	59.9–61.6
Castel	65.5	Venturi	63.1
Poncelet	57.2–60.5	Dr. Young	64
Tredgold	62.5	Alger	61

The coefficients of discharge for standard *rectangular orifices* are given as follows:

	Per Cent.		Per Cent.
Bidome	62–62.6	Weisbach	61–62
Boffnet	61.5	Jackson	62.5
John Banks	67.2	Eytlewein	62.1
Michelotti	62.5	Neville	62
Helfham	70.5	Downing	62.5
Brincley	63.1	Perry	62
Smeaton	63.1	Turneaure and Russell	62
Lispinasse	59.4–64.7	Fanning	60.1–62.7
Pin	59.4–64.7	Merriman	59–63
Isaac Newton	70.7	Trautwine	62
Poncelet	59.6–69.4	Mead	62
Lebros	59.6–69.4	Bellasis	62

The courts used 62 per cent in 82 *Wis.* 437, 444; 30 *Me.* 433, 436–7; 45 *Pa. State,* 61; 2 *Wharton* (*Pa.*), 477; etc.

A coefficient of discharge of 62 *per cent is generally recognized by hydraulic engineers as holding for sharp-edged orifices whether circular, square or rectangular, when constructed to avoid ajutage effect, i.e., for " standard " apertures. While not absolutely exact for all sizes of openings and heads, it is practically correct.* For the setting of a standard orifice so as to avoid ajutage effect, see p. 128.

The coefficient of discharge is the ratio of the actual to the theoretical flow through an orifice under the vertical

Digitized by Google

head measured from the surface of the water in the reservoir or flume down to the center of the opening.

The flow is determined by multiplying the area of opening by the velocity through it. The velocity is, theoretically, the square root of the product of twice the acceleration due to gravity and the head, or $\sqrt{2gh}$. The acceleration of gravity being 32.2, $2g$ is 64.4, and $\sqrt{2gh}$ is $\sqrt{64.4h}$, or $8.02\sqrt{h}$. Thus, for a 4-foot head, the theoretical spouting velocity is $8.02 \times \sqrt{4}$, or 16.04 feet per second.

The theoretical discharge through an orifice 1.5 feet square under a 4-foot head is $16.04 \times 1.5 \times 1.5 = 36.09$ cubic feet per second. If the contraction is complete, so that the coefficient of discharge is 62 per cent, then the actual flow is 0.62×36.09 or 22.4 cubic feet second.

" The word *orifice* always signifies an opening, the upper side of which is covered with the liquid in the feeding reservoir: when *not qualified* it means an opening pierced in a thin wall, the escaping jet only touching the regular line formed by the inner edge or corner with perfect interior contractions" (Hamilton Smith, 1886, p. 5).

" *A rounded interior edge in an orifice* is therefore always a source of error where the object of the orifice is the measurement of the discharge" (Merriman, 1900, p. 90).

COEFFICIENT OF DISCHARGE THROUGH BULKHEAD GATES

It is difficult to construct a bulkhead gate at the head of a canal, or flume, or at the entrance to a forebay, " standard." There is bound to be more or less ajutage effect, or a greater or less suppression of the contraction. Accordingly

Digitized by Google

the coefficient of discharge is usually greater than 62 per cent. The gate may be constructed to approach and even exceed 100 per cent of the theoretic discharge due to the head.

Robt. E. Horton found that the head gates of the so-called mammoth flume in Watertown, N. Y., in 1915, had a discharge coefficient of 82 per cent, and that the velocity of approach in the pond increased the coefficient to 90 per cent.

The bulkhead gates at the north end of the middle dam in Little Falls, N. Y., have a coefficient of discharge of about 95 per cent, including the velocity of approach.

Trautwine gives 80 per cent discharge coefficient for suppressed contractions (1907, p. 544), while Mead (1908, p. 43) gives 98 or even 99 per cent. Bellasis (1903, p. 46) gives 100 per cent for complete and 81 per cent for half-suppression of the contraction.

"Two orifices adjacent, separated by a narrow bar, discharge more than the two considered separately because of mutual velocity influences. When the width of bar is less than the least dimension of the orifices the discharge will nearly equal that thru an orifice of area and form like orifices and bar combined less that of an orifice of area and form equal to the bar with contractions suppress next the orifices" ("Amer. C.E. Pocket Book," 1911, p. 842).

Eytlewein found that openings in the shape of the contracted vein had 96.9 per cent discharge coefficient, and for wide openings with the bottom on a level with the reservoir, or sluices with walls in a line with the orifice, the coefficient is 96.1 per cent (Gregory, pp. 268–9).

Reynolds gave 96.25 per cent discharge coefficient for

Digitized by Google

gates without contraction (p. 11), Molesworth, 96 per cent (23d Ed., p. 275), and Tredgold, 97.5 per cent (p. 193).

No hard-and-fast rule can be laid down for the discharge coefficient of a head gate. The range is from 62 *to* 98 *per cent, and the figure to be used is known only when the form of construction is given.*

COEFFICIENT OF DISCHARGE FOR GATES AT, AND ADMITTING WATER ONTO FLUTTER, UNDERSHOT, BREAST AND OVERSHOT WHEELS

The coefficient varies with the design and construction of the wheel gate and its relation or position with reference to the wheel. Such gates are usually made with contractions suppressed at the bottom and sides of the openings, and partially or entirely at the tops. The openings are wide and shallow, the gate lift being relatively small, so as to give a thin stream suitable for striking or entering the wheel buckets.

After passing the gate the water feeding an overshot wheel usually traverses a short, sloping apron, sometimes expanding in width, the fall along the apron partially or entirely neutralizing its resistance.

An undershot wheel usually has a gate close to the buckets, constructed to practically suppress the contraction, while the fall in the chute, from the gate to the bucket, balances the chute's resistance.

The breast wheel's gate is set against the buckets and contraction is suppressed. The discharge drops into the empty buckets.

Where the contraction is complete the discharge coefficient

Digitized by Google

is 62 *per cent. Where the contraction is completely suppressed the coefficient is nearly* 100 *per cent. With the contraction half suppressed the coefficient of discharge is about midway between* 62 *and* 100 *per cent, or about* 81 *per cent. With the contraction three-fourths suppressed the coefficient is about* 90 *per cent.*

Mahan's " Breese," p. 57, gives 95 per cent as the discharge coefficient for these wheels, as does Grier, pp. 211–2. These are for contractions suppressed.

Scribner, p. 157, and Haswell, 1854, p. 176, give 81.25 per cent for the coefficient; Spon, 80.3 per cent; Tredgold, 86.25; and Appleton, 89 per cent, the contraction not being fully suppressed.

Reynolds gives 66.7 to 75 per cent; Overman, 67 per cent; Byrne and Templeton, 67.5 per cent; and Leonard, 68.8 per cent for the coefficient of discharge for these wheel gates, the contractions being, of course, but partially suppressed.

Builders of the Smith, Eureka, Wilson, Dolan, Christianna and other turbines, in their wheel books, mention 62 or 63 per cent as the coefficient of discharge for overshot wheels—on the assumption, of course, that the contraction of the wheel gate is complete.

Flutter wheels are gated like an undershot, and their coefficient of discharge is usually about 95 per cent.

Digitized by Google

COEFFICIENT OF DISCHARGE FOR TUB, FLAT-VANED, CENTRAL-DISCHARGE, SCROLL-CASE WHEELS, AND OTHER WHEELS SUPPLIED BY TAPERED SPOUTS

These wheels have spouts tapering to a throat at the wheel. The sides of the spout are inclined at about 14 degrees.

Jas. Emerson, 1894 Ed., 152, says, "One of the commonest and easiest turns which we see given to water is in the scroll of an ordinary wooden wheel. Supposing this scroll to be 72 inches in diameter with a 12-inch spout leading to it; that is, the diameter of the scroll is 6 times that of the spout and the velocity of the water 25 feet per second (=10 foot-head). To maintain this velocity requires an additional head of 2.5 feet, but as this loss is hidden by the reduced velocity of the water caused by its impact on the buckets, and also rapidly grows less with its reduced velocity . . . It is very generally ignored and sometimes denied altogether."

This quotation means that the coefficient of discharge is 89.3 per cent. Emerson does not here mention the spout as being tapered.

The Willimansett tapered spout experiments by Emerson, given on p. 36, showed 91.39 per cent discharge coefficient. They were made with one-eighth models of a spout 10 feet long, having its throat 32 by 36 inches at the lower end, and mouth 36 by 48 inches at the upper end, as used at Plattsburg, N. Y., for a tub wheel.

Bennett's "D'Aubuisson," pp. 407–410, found 95 per cent discharge coefficient for a tapered spout.

Reynolds, p. 12, gives, "A central discharge wheel

Digitized by Google

receiving the water through a spout into a scroll case, and discharging through openings four times the size of the spout, has been made to pass 90 per cent as much water as would be discharged through the best formed ajutage under the same head into the open air."

Molesworth, p. 275, gives 94 per cent discharge coefficient for a taper spout, or converging mouthpiece, the sides being inclined at 13.5 degrees.

Alcott, p. 75, for converging, conical spouts, with length three times the diameter, gives 94 per cent discharge coefficient.

Wilson, p. 54, gives the discharge coefficient for wheels with tapered spouts as nearly 100 per cent.

" A rule for determining the flow of water per second through a spout from a flume as adopted in *Hartwell vs. Mutual Life Ins. Co.*, 50 Hun, 497, 3. N. Y. Supp. 452, was to multiply the square root in the number of feet in the head by 8.025, and multiply this result by the square feet of the area of discharge, and the result was the cubic feet per second" (Farnham on " Waters and Water Rights," III, 2292–2294).

COEFFICIENT OF DISCHARGE FOR TURBINES

The coefficient to be applied to the smallest throat or discharge openings in a turbine, in order to determine the volume of flow through it, due to the head of water, is given by builders, as follows:

Leffel, Poole and Hunt, Success, Reliance and Trump wheels, 60 per cent; Victor and North American, 64 per

Digitized by Google

cent; Adams or Warren, 62 per cent; Reynolds, 55 per cent; Chase, 62.3 per cent; Wilson, 62.5 per cent; Bodine-Jonval, 63 per cent; and Wemple, 52.5 per cent.

Jas. Emerson, 1894, p. 42, gives, "There are turbine builders who suppose that their wheels discharge the full quantity theoretically due their openings, while those calling themselves engineers generally believe the discharge of such wheels to invariably be about 60 per cent due their openings, when in fact the discharge of turbines varies all the way from 35 to 100 per cent, and in special cases perhaps still more."

On p. 67, Emerson says, "There is an idea that turbines discharge 60 per cent of the theoretical quantity due their openings. The idea originated from obsolete wheels of the Fourneyron type. Of the modern wheels I have had care of tabling hundreds, yet have never known of one reaching 55 per cent of its openings; 52 perhaps is a fair average, 49 about all that the American can do."

Emerson, p. 101, also states that "The discharge of a turbine in proportion to its openings depends upon its construction.

"With those of a central discharge it is the least; with such wheels of fair efficiency it is likely to range between 40 and 50 per cent; with outward discharge, 60 per cent and upwards; while with those discharging the water downward, it averages about 55 per cent.

"The chutes of a curb are made much larger at their outer then their inner ends, consequently, can pass much more water than the wheel will discharge, though the openings of the wheel may be somewhat the largest, so that the openings of the wheel govern the discharge."

Digitized by Google

Emerson tests of a Tyler turbine, in 1873, showed 51 and 52 per cent discharge coefficient (p. 212).

At Holyoke, flume tests show from about 50 to 62 per cent discharge coefficients. The author found from 52 to 55 per cent for several different types of turbines he has measured during the past twenty years. R. E. Horton gives from 40 to 60 per cent (" W. S. and I. P.," 180, p. 90).

GRANTS OF INCHES OF WATER

It has already been shown that when a water grant is defined as an *aperture* of a given, definite size, a discharge coefficient of 62 per cent is to be applied, while it must be a standard orifice with complete contraction, and without a trace of ajutage. The discharge is such as can be reasonably obtained through said aperture, with its discharge coefficient, for the head prevailing. That is, an aperture grant compels the use of a given sized aperture and none other, in a " well-secured and tight flume or bulkhead." The amount of water granted is limited and controlled by the actual use of the aperture defined in the grant.*

On the other hand, when a grant is made of so many *inches of water* for a particular locality, the *inches* are used simply as a convenient *measure of the quantity granted*, and not as a definition of any particular orifice required to be used.†

In the early days, say up to 1850, millwrights measured the use of water or the power needed by the throat and the

* *Dexter Sulphite Pulp and Paper Co. vs. Jefferson Power Co., et al.*, 179 N. Y., A. D., 332.

† *Palmer vs. Angel*, 69 *Hun*, 471; 23 *N. Y Supp.* 397.

Digitized by Google

head on the throat feeding a tub, flutter, or other primitive type of wheel used. Such throats were usually made with contractions nearly or fully suppressed, and with close to 100 per cent discharge coefficients. It became known to millwrights and mill men that so many inches of throat under such a head would drive a saw, or a run of stones, etc. The power and water used were measured by the inches of throat and head, rather than by horse-power or cubic feet per second.

When a new wheel, say a turbine, was offered to perform the same or more work, it was restricted to the use of no greater number of inches of water than prevailed for the more primitive wheel. In this way it became necessary for turbine builders to rate their wheels in inches of water.

" Our correspondence indicates a frequent misapprehension of the meaning of the term ' square inches of water vented.' Some think that in a (turbine) wheel said to use ' 100 square inches of water ' it is meant that the entire area of the chute apertures measure 100 square inches; others think the meaning to be that the entire area of the discharge aperture is 100 square inches. Neither of these views is correct, but the meaning is that the *theoretical discharge* under any head, due to the aperture measuring 100 square inches in cross-section, would *equal the actual discharge* of the (turbine) wheel under the same head. *A ' square inch of water ' means a stream exactly* 1 *inch square, and equal in length to the theoretical velocity in feet per second due to the head from under which it issues.* For a head of 4 feet this length would be 16.04 feet per second; for a head of 10 feet, 25.36 feet per second" (Victor " Turbine Book," 1887, p. 23).

Digitized by Google

"The square inches at the head of each turbine table show the area of an opening which would *theoretically* discharge the given quantity of water under the given head" (Hercules, p. 22; see Leffel, 1894, p. 23; also, Reynolds, p. 13, and Success, p. 26).

"It is the custom of most water wheel (turbine) manufacturers to publish upon their tables the 'number of square inches' each size wheel vents or uses. This has caused much discussion among millwrights and others as to what is the proper way to measure a (turbine) wheel, some claiming that the measure is correct, *for upon some powers where the water is leased, it being specified that they leased a certain number of 'square inches' (the leases having been made when there were no other wheels used upon the stream than the old 'wooden central discharge,' and the customary way being to measure the throat or inlet)*; thus good turbines have been barred out, through the ignorance of the parties interested, because the apertures measured more than the lease called for, when the turbine would have done the same amount of work with one-half the water used by the *central discharge whose throat had the required area.* The term 'square inches a wheel vents or uses,' is usually, or at least in our case has been determined by measuring the water in the tail race after it had passed through the wheel, finding the number of cubic feet passed per minute, and then *computing* the size stream required discharged *into the open air* (without any other resistance) to discharge this amount, and the area of the cross-section of this stream was the number of square inches used by the wheel" (J. C. Wilson, p. 54).

"The *vent of turbines*, as usually expressed, is the area of an orifice which would, under any given head, *theoretically*

Digitized by Google

discharge the same quantity of water that is vented or passed through a turbine under that same head when the wheel is so loaded as to be running at maximum efficiency" (R. E. Horton, "W. S. and I. P." No. 180, p. 89).

" Manufacturers formerly gave the vent of their wheels in conjunction with the rating tables, and *water privileges are often deeded in terms of the right to use a certain number of 'square inches of water' from a stream or power canal. As commonly interpreted this implies no definite coefficient of contraction, the owner being entitled to use as much water as can flow naturally through an orifice of a given area, under the existing head. The limiting value of the coefficient of discharge is unity*" (*Ibid.*).

" *In the use of scroll wheels, fed by short flumes leading out of the race ways, and having a contracted rectangular throat, the ventage agrees more or less closely with the area of the throat*" (*Ibid.*).

" The vent of a turbine should not be confused with the area of the outlet orifice of the buckets. The actual discharge through a turbine is commonly from 40 to 60 per cent of the theoretical discharge of an orifice whose area equals the combined cross-sectional areas of the outlet ports measured in the narrowest section" (*Ibid.*).

" Another early modification of the rouet consisted in placing the runner in a spiral case as shown in Plate III (*g*). Such wheels drew water from the flume by means of a short tapering spout. Spent water was discharged at the top and bottom of the case around the shaft. This type of wheel is known as a *scroll-case* or *central-discharge* wheel. They may be operated entirely by impulse or by combined action according to the arrangement of the vanes and the size of

Digitized by Google

the inflow and outflow openings in the case. Simple wooden and iron wheels of this type were more extensively used than any other form of water wheel in central and northern New York at one time, *and the use of this type, the case having a tapering throat in which the gate was placed, has apparently given rise to the use of the term 'square inches' in defining water rights, it being customary in deeding water rights to provide for enough water for such a wheel having throat section of a certain number of square inches area. The corresponding quantity of water was substantially equal to the theoretical flow through an orifice of the same size, without contraction, in the wheels operating by impulse*" (R. E. Horton's Lecture on Turbine Water Wheel as a Prime Mover, at Potsdam, N. Y., 1909).

"A square inch of water means a stream exactly an inch square, its length depending upon the head from which it issues; for a head of 4 feet, it means a stream an inch square, 16.04 feet in length, per second; for a head of 100 feet, a stream an inch square, 80.35 feet in length, per second. To turn this into cubic feet, multiply by 12, than divide by 1728" (Emerson, 1878, p. 22; see, also, Grimshaw's "The Miller, Millwright and Mill Furnisher," 1882).

Emerson illustrated this rule by a reference to North Sunderland, Mass., where a grant of 15 inches of water under 62-foot head meant 65.77 cubic feet per second (*Ibid.*, p. 20).

From an engineering standpoint the grant of "inches of water" means the theoretical discharge through a non-contracted orifice of the size designated under the head obtaining, the coefficient of discharge being substantially 100 per cent.

Digitized by Google

On the other hand the courts do not generally recognize this definition as established, and when a grant is construed in accordance with the engineering definition, the decision is based upon practical construction and use, rather than upon the engineering basis, as shown by the two cases now to be cited.

In the case of *Palmer vs. Angel*, 69 *Hun*, 471; 23 *N. Y. Supp.* 397, a grant of 1863 was for the right to tap a race way at a certain location and lead water therefrom to the grantee's mill, " also, the right to use, from the race way —600 inches of water for the purpose of carrying their mills and machinery." The grantor agreed to furnish the water at all times, after reserving 500 inches for his own use. The grantee could obtain up to 200 inches of additional waters at $1.50 per inch. In or before 1865, the grantee bought the additional 200 inches, making 800 inches total as his right. The point in dispute was as to where the water should be measured. The grantor wanted the measurement made at the location where his race was tapped by the grantee. The grantee wanted the measurement made at his wheels. The court cited *Cromwell vs. Selden*, 3 *N. Y.* 253; *Wakely vs. Davidson*, 26 *N. Y.* 387; *Groat vs. Moak*, 94 *N. Y.* 115; *Mudge vs. Salisbury*, 110 *N. Y.* 413, stating that in them the water grants were of *power*—power for saw, grist or other mills, and " the amount of water was measured by the *power* that was granted."

" In this (present) case the parties have no specified power granted, but have a specified *quantity* of water. While the water mentioned in the grant here was, of course, intended to be used for the purpose of producing power, yet the amount of power was not specified, but the *amount*

Digitized by Google

of water was. . . . It is not water sufficient to operate a given number of wheels, or water sufficient to operate the mill, but of 800 *inches of water.* The grant is ' of the right to use from the race way.' The grantor ' agrees to furnish said water in their said race.' . . . *The referee has found from the evidence before him that the grant of water is of square inches, and that, at the existing head of water at the point of delivery, it will require an opening or orifice of* 1280 *square inches to permit the delivery of* 800 *inches, and from this conclusion I can see nothing in the evidence to cause me to differ.*" Judgment affirmed. All concur.*

It was held that the measurement must be made at the location where the grantor's raceway was tapped by the grantee.

In the case of *Janesville Cotton Mills vs. Ford,* 82 *Wis.* 416, " *Held,* upon the evidence, that the term ' square inch of water ' had not in 1860 (prior to which time the earlier conveyances were made) acquired, even among hydraulic engineers and mill men, the fixed technical meaning of a stream of water with a cross-section in area of 1 square inch, moving at the velocity due to the given head. The grants are to be construed, therefore, *in the light of the surrounding circumstances and the practical construction placed upon them by the parties.*"

The parties had by agreement, for several years, employed an engineer to apportion the waters, and he gave to each grantee the inches of water owned by him, " taking as a standard a *stream* having a cross-section area of a *full* square

*NOTE. By applying a discharge coefficient of 62.5 per cent to the gross area of 1280 square inches, a net area of 800 square inches is obtained. The *theoretical* flow through 800 square inches is identical with the actual flow through a standard orifice of 1280 square inches.

Digitized by Google

inch and moving with the velocity due to the head." This was the only rule adopted and used by the parties.

"*Held* that the *practical construction*, by the parties interested, of the term 'square inch of water' in the conveyances, *being reasonable and definite*, must be taken as the true construction of that term."

In this case the grants were for a specified number of inches of water under a head of 4 feet, or its equivalent under any other head.

The "reasonable" and "definite" rule of millwrights and hydraulic engineers, is likely to hold in determining the meaning of "inches of water" in a grant. There is a clear distinction between such a grant and an "aerpture" grant.

FLUTTER OR SAW MILL WHEELS

Flutter wheels are primitive undershots, and the water acts by impulse upon them. The discharge coefficient for the gate of the flutter wheel is nearly or quite 100 per cent as has been shown on page 117.

The rim or perimetral speed of such wheels is high, so as to give a rapid motion to the upright saw of a saw mill, for which such wheels were commonly used. Craik, p. 95, mentions the rim speed as 67 per cent of the velocity of the water at the wheel gate.

Flutter wheels are adapted to a head of above 6 feet "where water is plenty. . . . They are built low and wide, for low heads; and high and narrow for high ones, so as to make (for an upright saw blade) about 120 revolutions, or strokes of the saw, in a minute" (Evans, 1795, Part 5, p. 78).

Digitized by Google

A flutter wheel for an upright saw is recommended by Ellicott as follows, he adding, " but if there is plenty of it (water), the wheels may be made wider than directed in the table, and the mill will be more powerful" (*Ibid.*).

1795 TABLE FOR FLUTTER WHEELS TO OPERATE A SAW (Ellicott)

Head of Water.	Wheel Diameter.		Wheel Width.	
Ft.	Ft.	In.	Ft.	In.
6	2	8	5	6
8	2	11	4	8
10	3	1	4	0
12	3	3	3	6
14	3	5	3	0
16	3	7	2	6
20	3	11	1	10
25	4	4	1	5
30	4	9	1	0

On p. 9 of the Appendix of Evans, 1795, is given Wm. French's description of a saw mill using a flutter wheel, to make the saw " strike between 100 and 130 strokes in a minute." This has 9 buckets, 4 being active at one time. Buckets 4.5 inches wide. The " go-back " or log carriage wheel described is a tub wheel 4.5 to 6 feet diameter, with 16 buckets. French advises the following flutter wheel table for a single saw, the crank arm being about 11 inches, but varied to suit the timber (see page 131 for table).

Flutter wheels " are mostly used for . . . the saw in saw mills . . . where the water is plenty, and the fall above 6 feet . . . adapted to any head above 6 feet . . . (they are) low and wide when the head is small, and high and narrow when there is a high head, so as to have from 120 to

Digitized by Google

Head.	Width of Wheel.	Diameter of Wheel.		Throat.
Ft.	Ft.	Ft.	In.	In.
12	5	3		1¾
12	5½	3		2
10	6	3		2¼
9	6½	2	10	2½
8	7	2	9	2¾
7	7½	2	8	3¼
6	8	2	7	3½
5	9	2	6	3¾

130 revolutions or strokes of the saw per minute" (Pallett, 1866, p. 232).

"When the head is about 6 feet, the diameter of the wheel should be about 2 feet 8 inches, the width being 7 or 8 feet. . . . There should always be a full head, to give a lively motion; . . . The opening in the gates should be from 3 to 4 inches, that the water may give the required power" (*Ibid.*).

Haswell (1909, 571) says that the "flutter or saw mill wheel" operates "under a high head of water," the "water being plenty."

"The water way for the old flutter wheel is a curve, the circle of which coincides with that of the wheel at the bottom, or termination, but gradually recedes from the wheel as it rises to about the center of the wheel, where this 'compass fall' commences, and is the width of the 'throat' away from the wheel. Thus only a portion of the water is intercepted by the first float or bucket, the rest passes on to the next one, which intercepts a little more, and so on until the last bucket catches the whole: The gate for this is a piece of thick plank the length of the chute, and

Digitized by Google

somewhat wider, and the thick edge next the chute beveled off and slightly rounded, to encourage the entrance of the water" (Craik, pp. 183, 184).

The flutter wheel, attached to a saw mill, is illustrated by Evans, in his 1795 edition.

R. E. Horton well summarized the meager data upon flutter wheels when he placed the *efficiency at* 10 *per cent, with the best at* 20 *per cent* (Potsdam, N. Y. Lecture on Turbine Water Wheel as a Prime Mover, also "W. S. and I. P.," No. 180, p. 23).

In the trial of the *Carthage Tissue Paper Mills vs. Village of Carthage, N. Y.*, Jos. V. Guyot was the only witness able to describe the saw mill built under a grant of 1830. He described the saw as propelled by a flutter wheel, with buckets and gate each 10 feet long, and the gate raised 7 inches, or a use of 840 inches of water under a 9-foot head. He also said that the "gig" wheel (for the go-back of the log carriage) used 150 inches, as did the log-pulling or "bull" wheel. Guyot also said that a single saw would have a flutter wheel 8 feet long with 5 or 6 buckets. The court found 1000 inches of water for a saw mill with one saw.

TUB WHEELS

The tub wheel is a primitive turbine acting by impulse. It was used earlier than 1750 (Bennett's "D'Aubuisson," p. 411), and is an American type (Appleton, II, p. 787).

The old-fashioned spoon or tub wheel had a runner on a vertical shaft, and set in a cylindrical shell, or tub, built up towards the level of the head water. The water was

Digitized by Google

conducted to the wheel by a tapered spout, the sides making an angle of 11 or 12 degrees. The smallest opening, or throat, was at the tub. One side of the spout was tangent to the tub. The runner, with its vertical shaft concentric with the tub, had a number of paddles, vanes or buckets regularly distributed around its axis. "The horizontal section of the paddles presents a slightly curved form, having its concavity towards the side from which the action of the water comes; cut by a cylinder concentric with the well (or tub), they would give inclined lines more or less like arcs of helices. . . . the water comes through the 'spout' with considerable velocity, endeavors to circulate all around the well (tub), and, meeting the paddles in its road, obliges them to turn, as well as the axle that supports them. At the same time, the water obeys the law of gravity passes through the wheel by means of the free space between the paddles, and falls into the tail race, which ought to be a little lower . . . the water must undergo a good deal of disturbance in entering the wheel, and, moreover, . . . it acts upon the latter for too short a time to entirely lose its relative velocity. Also the effective delivery, sometimes very slight and about 0.15, never exceeds 0.40" (Mahan's "Bresse," pp. 66–68).

"A tub mill has a horizontal water wheel, that is acted on by the percussion of the water altogether, the shaft is vertical, carrying the (mill) stone on the top of it, and serves in place of a spindle; the lower end of this shaft is set in a step fixed in a bridge-tree, by which the stone is raised or lowered . . . ; the water is shot on the upper side of the wheel, in a tangent direction with its circumference. . . . The wheel runs in a hoop, like a mill stone hoop, projecting

Digitized by Google

so far above the wheel as to prevent the water from shooting over the wheel, and whirls it about until it strikes the buckets, because the water is shot on in a deep narrow column, 9 inches wide and 18 inches deep, to drive a 5-foot stone, with 8-foot head—so that all this column (of water) can not enter the buckets until part has passed half way round the wheel, so that there are always nearly half the buckets, struck at once; the buckets are set obliquely, so that the water may strike them at right angles . . . As soon as it strikes it escapes under the wheel in every direction . . . " (Evans, 1795, Part II, p. 11; see, also, Pallett, p. 230).

Evans, p. 13, states that the water does not act to advantage on a tub wheel; that the wheel is made small to obtain the needed speed for a mill stone directly connected, and this makes " the buckets take up a third of their diameter . . . "; its efficiency is less than an undershot's; for low heads use two spouts per wheel, each 6 by 13 inches, set opposite each other, rather than one spout, 9 by 18 inches; are simple and cheap, needing no gearing; have sufficient speed at 9 or 10-foot fall, and plenty of water; and tubs do not use any more water than do undershots, for the same power, with a fall of 8 feet or more.

It has been shown on p. 119 *that the coefficient of discharge is nearly or quite* 100 *per cent of that theoretically due to the area of the throat at the small end of the tapered spout, and the head of water upon the center of that throat.*

Evans, 1795, Part II, 14, gives the *wheel speed* at the center of the buckets as 66 per cent of the water velocity, or of the theoretical velocity due to the head. On page 16 he gives the following:

Digitized by Google

EVANS' TUB WHEEL TABLE FOR STONES OF VARIOUS SIZES IN 1795

Head Feet.	Diameter of Center of Buckets, Feet.				Cubic Feet of Water per Sec.		Areas of Throats of Spouts, Sq.ft.	
	Stone Diameter.				Stone Diameter.		Stone Diameter.	
	4 Ft.	5 Ft.	6 Ft.	7 Ft.	4 Ft.	6 Ft.	4 Ft.	6 Ft.
8	2.17	2.73	3.30	3.90	17.34	40.90	0.76	1.79
10	2.63	3.28	3.97	4.59	13.37	32.72	.54	1.28
12	2.90	3.60	4.34	4.90	11.56	27.26	.41	.97
14	3.12	3.90	4.70	5.43	9.90	23.36	.33	.77
16	3.34	4.12	5.01	5.83	8.67	20.45	.27	.60
18	3.51	4.41	5.32	6.18	7.70	18.18	.22	.52
20	3.71	4 62	5.49	6.47	6.93	16.36	.19	.45

The cubic feet second of water, in the table quoted, are the theoretical quantities for the throats and heads with a 100 per cent discharge coefficient. In this connection it is to be noted that Evans gives 5 bushels of wheat per hour for the capacity of a 5-foot mill stone in 1795, and the power used by various sizes as follows:

Stone, Ft.	R.P.M.	Cubochs.*	Gross h. p.	Power Ratio.
4	122	52	5.78	100
5	98	111.78	12.42	215
6	81	192	21.33	369
7	70	313	34.78	602

* A cuboch is a term coined by Evans, used only by him, and meant 1 cubic foot of water falling 1 foot in a second. His power theories were unreliable, as is evident to any mill man.

Evans also says that when the cubochs are divided by half the head the cubic feet per second of water needed are obtained; the cubic feet divided by the velocity gives the area of the throat or gate aperture; and that it is necessary to cast off a foot for the water in the tail race for a geta-

Digitized by Google

way, and 9 inches to get the water onto the wheel, or a total head reduction of 21 inches (Part II, pp. 16, 17). This analysis by Evans is entirely theoretical as is the power deduced therefrom.

Emerson (1894, p. 36), tested a tub wheel in 1885 at Highgate, Vt. The water had an *open* spout or trough with parallel (not tapered) sides. The gate at the head end of the trough had full contractions and 61 per cent discharge coefficient. Head of 7.25 feet on center of gate opening. Trough was 8 feet long and pitched to make 11-foot head on the half-depth of the wheel. It took 5.2 horse-power to grind a bushel of ordinary, and 5.9 horse-power for a bushel of hard Minnesota wheat per hour.

The Falls Mill in Fredericksburg, Va., built in 1727, had two tub wheels with throats 16×9 inches each, under an 8 ft. head. Alfred Duvall, Millwright, on April 1, 1848, determined their discharges to aggregate 45 cu. ft. of water per second, which corresponds to a 100 per cent coefficient.* J. B. Ficklen, Sr., former owner, in an affidavit of June 30, 1859 (in *Forbes vs. W. P. Co.*) said that the grinding capacity of this mill thus equipped was a total of from 25 to 50 bushels of corn per day.

Bennett's " D'Aubuisson," p. 411, cites a tub wheel 3.28 feet diameter, 0.656 foot thick or high, with 9 curved floats or buckets. The tub was 3.34 feet interior or diameter and 6.56 feet deep (axially), the runner being near its bottom. The spout had a throat 0.722 foot wide, one side being tangent to the interior of the tub.

Guyot in the *Carthage Tissue Mills case* (p. 49 of *Record*) described an old tub wheel 8 feet diameter with throat of

* See deed of J. B. Ficklen to Thos. F. Knox, June 27, 1851.

Digitized by Google

spout 14 by 20 inches. The head was about 9 feet. It ran a machine shop. Guyot also told of 4 tub wheels in a grist mill, each 6 feet diameter with throats of 200 square inches, under the same head (p. 56); also, of an 8-foot tub wheel, throat 300 square inches for 3 nail cutters in a nail factory (p. 65).

Tub " wheels cannot be recommended, in consequence of the water not acting to advantage . . . even when constructed in the best possible manner. If the head be low, it is difficult to get a sufficient quantity of water on them, so as to drive them with sufficient power. . . . only suited to those streams where the water runs to waste the whole year . . . " (Pallett, p. 231).

The efficiency of tub wheels has been given as follows:

	Per cent.
Evans, in table above, about	37
Horton (Potsdam Lecture)	20, best 50
Drake (p. 160)	27 to 30
Mahan's " Breese " (p. 68)	15, never exceeds 40
Abbott (p. 5)	25
Bennett's " D'Aubuisson" (pp. 416-7).	20 generally, 25 best
Wells (p. 154)	10
Scribner (p. 154)	27 to 30

Many writers class tub and undershot wheels as being of equal efficiency, i.e., from 25 to 35 per cent, which the author adopts.

Digitized by Google

WOODEN SCROLL-CASED, CENTRAL-DISCHARGE WHEELS

Wooden, central-discharge wheels were the prevailing type in the United States in the period between the abandonment of undershot, tub and breast wheels and the introduction of turbines. This period varied in different localities, but may be given the dates of from 1835 to 1855. Such wheels are now in use in rural localities in grist mills. They were cheap to build, required no cumbersome gearing, and, aside from poor efficiency, had all the advantages of the turbine. They were speeded for direct connection to the mill stones.

A central-discharge wheel is built with a vertical shaft, wood or iron, to which are secured flat vanes or buckets or paddles. The distance across the center from tip to tip of buckets is the diameter of the wheel or runner. This runner and shaft are carried on a submerged step underneath the wheel. The runner turns in a case, shaped like a scroll. The top is planked over, but is not air tight, there being a small clearance between the cover and the shaft. The scroll side of the case is called the curb. Its interior is smooth and scroll shaped. It is usually built of wood. The bottom is of plank, with a large discharge opening through which the shaft passes and water discharges into the wheel-pit. The runner is inside the case and turns without contact with the case, or its cover and floor. The discharge opening is not made so great but that the tips of the buckets will extend beyond its perimeter and over the floor which has not been cut away, and this extension, or overhang, is called the shelf or shoulder.

Digitized by Google

Water is supplied to the scroll case by a tapered spout connecting the case with the flume, pond, or other source of supply. The small end of this spout, where it connects with the scroll case, is called the throat. The spout is connected tangentially with the casing. There is a gate in the spout, never placed at the throat, but at some point from it towards the pond, so that, the spout being tapered, the gate is larger than the throat.

Hughes (1855, p. 249), gives an illustration (here reproduced), and description of this central discharge wheel.

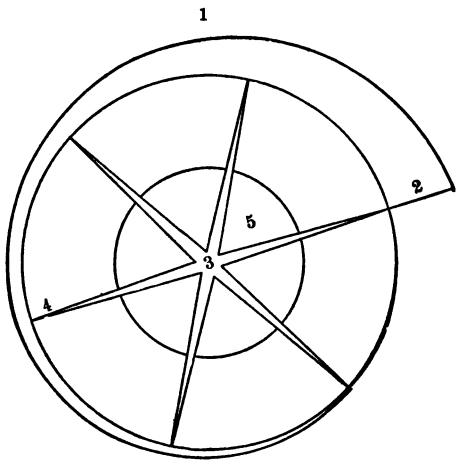

CENTRAL DISCHARGE WATER-WHEEL.
(From Hughes)

Craik, in his book of 1872, calls these wheels "wooden center vent" on p. 139; "scroll-cased center-vent wheels," on p. 141; and on pp. 205–207 he gives the following method of laying out the scroll, illustrating the method:

". . . ; the wooden centre vent or scroll wheel being as convenient and cheap as any. This is made by squaring the end of the shaft to six sides, and bolting, or otherwise

Digitized by Google

attaching a short piece of plank or float to each square, with the outer ends pointing in the direction the wheel is intended to turn. The scroll may be made of four pieces of timber of the proper depth, framed together, with one side falling out from the square, and leaving an opening for the admission of the water, the scroll mark is struck around upon this, cutting a portion of the circle out of each

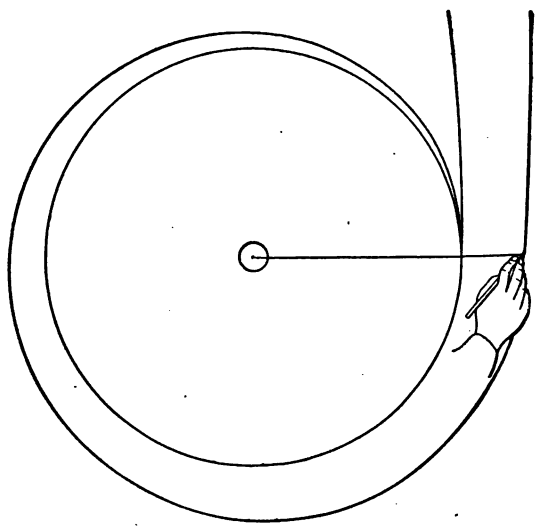

CRAIK'S ILLUSTRATION FOR A CENTRAL DISCHARGE WHEEL

piece, and the corners are filled out to the same line. A bottom and cover are spiked on, each having an opening around the shaft to discharge the water.

"The following method of making a scroll is in some respects preferable: Make a square platform of plank for the bottom, a little larger than the outside of the scroll; make a center mark in this at the point which the center of the shaft will occupy; then with a radius or sweep from this center draw a circle to correspond with the outside

Digitized by Google

circumference of the wheel (floats), and from the same center draw another circle *about two-thirds of the diameter of the wheel*, for the opening for the shaft, and discharge water to pass through. Now mark off the width of the throat for the admission of water, commencing at the circle for the wheel, *one side of this throat is the commencement of the scroll, the other side its termination.*

"To mark out the scroll, make a small wheel, the circumference of which is exactly equal to the width of the throats; the wheel may be tested by measuring round it with a string, the length of which is equal to the width of the throat, or by making a mark on one side of the throat, and rolling it (the wheel) across the space to the other side. If the mark, when the wheel has made its revolution, comes exactly on the other side mark of the throat, it is right; if it overruns that, the wheel is too large, if it falls short, it is too small. Fasten this wheel upon the center of the bottom, and attach a line or a small wire to the edge of it, stretch the wire tight and fix a scratch point in it at the outside line of the throat, now draw the scratch round, keeping the wire tight, to the place of beginning, and the point will mark the scroll, terminating at the inside. Or, you may wind the wire round the wheel, and begin at the inside to mark, allowing the wire to unwind as you describe the scroll, which in this case will terminate at the outside; for this, like other good rules, will work both ways.

"Now lengthen the wire 1.5 or 2 inches, and describe another mark parallel with the first, and cut the space between, out to the depth of .5 or .75 ins. Cut planks of a length equal to the intended depth of the scroll, and circle

Digitized by Google

them like staves, then fit them into this space all around until the scroll is complete, and lastly, make a top or cover the exact counterpart of the bottom, and place on to these staves, and bolt or otherwise fasten the top and bottom together at each corner, and the curb or scroll will be complete. The throat, or opening for the admission of water, is connected by a spout with an opening in the flume, which is covered by a gate inside."

These central-discharge wheels acted by impulse. Having flat buckets, they were not turbines, since a turbine is defined as a wheel with curved buckets (see Turbines).

Such central-discharge wooden wheels were used in Martintown, Wis., in the 1860's, and elsewhere in Wisconsin and Illinois, while those now known to have been in use in New York were:

A 6-foot wheel at Stone's mill in Dexter, up to 1895 or 1898. Head 9 to 12 feet, throat 14.75 inches wide by 23 inches high, with 6 buckets overhanging or shouldering on the floor 12.25 inches each, the discharge opening being 43.5 inches diameter (Brownell, Binninger, Cook, Whitham).

One 52-inch wheel at Hounsfield, in Young's grist mill, head about 10 feet (Binninger, Whitham).

One 6-foot wheel at the old pumping station in Watertown, up to about 1885, with throat 16 inches wide by 20 inches high (Salisbury).

One 5.5-foot wheel at Adams, with throat 10 inches wide by 20 inches high (Walker).

One 5-foot wheel on the Mohawk, throat 10 by 16 inches (Bellinger).

One 5.75-foot wheel on Indian river, throat 12 by 18 inches (Dwyer).

Digitized by Google

One 5-foot wheel at Antwerp, throat 12 by 18 inches (Dwyer).

One 5.5-foot wheel at Ellisburg, is running in Reed's grist mill, with throat 7 by 20 inches (Babcock).

One 4.5-foot wheel with throat 13 by 26 inches, and discharge opening 1.5 to 1.66 of the throat (Mansfield).

One 4.5-foot wheel, built 1872, at St. Regis Falls, 14 by 18-inch throat (Mansfield).

One 4.5-foot wheel, throat 12 by 18 inches, at Champlain Village (Mansfield).

Seven 6-foot wheels at Carthage, Harrisville and Croghan, had throats 10 to 12 inches wide by 20 inches high (Galleciez).

One 5-foot wheel at Snell & Makepeace's flour mill, Theresa, 1867, with paddles 15 or 16 inches wide, throat 16 inches high, spout 2 feet long with a stab gate 16 by 16 inches, and head of 10 feet, drove smutter and other machinery (Snell).

One 5-foot wheel of the same dimensions, under a 14-foot head drove the "feed" department of the above mill (Snell).

Two of these wheels, 9-foot head, with throats of 300 square inches each were in a grist mill in Carthage, from 1840 to about 1880 (Guyot).

Four of these wheels, each with throats of 300 square inches, 9-foot head, were in the tannery at Carthage, from 1857 to 1875 (Guyot).

"All of the flouring mills on the Oswego river were equipped with what was termed the 'central-discharge, or wooden-scroll wheels,' rated at 20 horse-power; each pair of mill stones was propelled by one of these wheels, and

Digitized by Google

one or two such wheels for the connecting machinery of a 5-run mill manufacturing about 400 barrels of finished flour per twenty-four hours" (Caseo, 1858).

" Where there is a great volume of water an old wooden center-vent wheel will do good work" (J. C. Watson, Hall, N. Y., 1917).

Two 5-foot wheels at Hull, Canada, had throats 10 by 20 inches, the bucket boards being 20 inches wide. The discharges were from 2.5 to 3 times the throat areas (Mousseau).

One 6-foot wheel, at Hull, Canada, had a throat 12 by 24 inches, 24-inch buckets, and discharge area 2.5 to 3 times the throat area, or about 3 feet diameter, and containing a 15-inch shaft, the head being 16 feet (Mousseau).

In 1912, there were two central-discharge wooden wheels operating in a grist mill at Camden, and one 4.5-foot wheel in Caldwell's carriage factory, at Malone, N. Y. (Whitham).

These central discharge wheels were designed and built by millwrights who followed general and definite rules, based upon sound hydraulic principles. The scroll was correctly laid out and built with a smooth surface to reduce friction. The spouts were nicely tapered to get a high discharge coefficient at the throat. The wheel diameter was made to give the needed speed to its shaft, considering the head, the perimetral speed being about two-thirds of the water's velocity at the throat. The throat, considering the head, was made of area sufficient to give the needed power. The tips of the buckets nicely overlapped the discharge opening, the overlap being sufficient to permit the full opening of throat to face the tips of the buckets.

The millwright first ascertained the power needed, and then

Digitized by Google

the head available. He proportioned the throat to vent the required water, and the wheel's diameter to give the needed shaft speed.

The efficiency of the flat-vaned, scroll-cased, central-discharge wheels is given as follows:

Robt. E. Horton, in his lecture at Potsdam, N. Y., in 1909, puts the efficiency at 20 per cent, with the best at 50 per cent.

F. W. Ormsby, C.E., for several years with the Noye Mfg. Co., manufacturing flour-milling machinery, wheels, etc., and who has tested four of these central-discharge wheels at Oswego, put the efficiency at from 30 to 40 per cent.

G. W. Pearson, C.E., ran a milling test in 1877 with a central-discharge wheel having 8 buckets, and 7-foot head, in competition with a Ryther-Jonval and a Curtis turbine, measuring the corn ground by each and the water used. Assuming "1 horse-power per hour to grind 60 pounds of corn meal" Pearson computed the efficiencies to be, respectively, 52, 47.5 and 86 per cent. Had he taken the Curtis efficiency at 75 per cent (which is more likely), then the efficiency of the central-discharge wheel was 45 per cent, as judged by the grinding done.

The Author agrees with Mr. Ormsby, and places the efficiency of these wheels at from 30 *to* 40 *per cent.*

As shown on p. 119, *the coefficient of discharge* through the spout feeding these central-discharge wheels, *was about* 100 *per cent* applied to the area of the throat, and the vertical head above its center. These wheels were never built with draft tubes.

Digitized by Google

UNDERSHOT WHEELS

The undershot is the outgrowth of the current wheel. Both are built much like a non-feathering paddle wheel of a steamboat, whether a side or a stern-wheeler. The efficiency of a current wheel is given at 15 per cent by Horton and 16 per cent by Neville, or about half of that of an ordinary undershot.

It has been shown on p. 117 that the coefficient of discharge through the gate of the undershot varies from 62 to 100 per cent depending upon the form of the aperture, and that, as usually constructed, it is nearly or quite 100 per cent.

The development of the undershot, breast and overshot wheels along scientific lines is largely due to the model experiments in 1752–1753 of that marvelous engineer, John Smeaton. The model used was about 2 feet in diameter, yet the " maxims " deduced therefrom, and read before the Royal Society in 1759, stand uncontradicted to-day. It is true that wheel developments on a large scale have somewhat modified Smeaton's recommendations in that his advised perimetral speed was found too slow for commercial practice.

The rim or perimetral speed of the undershot is given as follows:

Banks, Jamieson, Wm. Emerson, Ferguson, Pallett, Mitchell, Neville, Appleton and Abbott, advise that the velocity be 33 per cent of the spouting velocity of the water under the head at its gate.

Smeaton, Weisbach and Lea advise the use of 40 per cent.

Digitized by Google

Donaldson, Byrne, Scribner, Ferguson, Overman, and Spon advise 50 per cent.

Templeton, Byrne and Haswell advise 57 per cent, and Sam, 55 per cent.

Grier advocates 67 per cent, and D'Aubuisson 40 to 75 per cent.

Evans uses 58 per cent in one of his tables and advises 67 per cent in practice, as does Ellicott.

Craik uses 33 per cent for large and 67 per cent for small wheels.

Gregory advised 33 to 50 per cent.

Rankine gives 50 per cent as the best speed, and designs for 70 per cent at times.

Haswell gives a range of from 50 to 60 per cent, advocating 57 per cent, as does Cullen.

Chambers advocates a rim speed of from 500 to 600 feet per minute or about 10 feet per second.

Evans, 1795, cites undershots in flouring mills (Part I, Art. 62), as follows:

" 15. *Undershot.* Velocity of the water 24.3 per second, velocity of the wheel 16.67 feet, more than two-thirds the velocity of the water. Three of these mills (wheels) are in one house, at Richmond, Virginia—they confirm the theory of undershots, being very good mills.

" 16. *Undershot.* Velocity of the water 25.63 feet per second, velocity of the wheel 19.05 feet, being more than two-thirds. Three of these mills (wheels) are in one house, at Petersburg, in Virginia—they are very good mills and confirm the theory."

Evans also cites " wheel 6 " as making 16 R.P.M. when loaded and 24 when empty, and four wheels at Ellicott's

Digitized by Google

Mills, near Baltimore, Md., as making 20 R.P.M. and 40 R.P.M. when loaded, as compared with 28 and 56 respectively, when empty or doing no work (1795, Part I, Art. 62).

Evans (Part V, p. 17) gives Ellicott's table for undershots which advocates 24 R.P.M. for a 12-foot wheel, and 25.5 R.P.M. for an 18-foot wheel, or rim speeds of 15 and 24 feet per second, respectively, or two-thirds of the velocity due to the head of water.

Evans of 1832 (on p. 154) gives Parkins' design of an undershot where rim speeds are given as high as 26.36 feet per second.

The American authors advise high perimetral speeds for undershots, or from 50 *to* 67 *per cent of the spouting velocity of the water due to its head.*

Bossut, Dr. Young, Byrne, Pallett and others advise that from 3 to 5 buckets, vanes, or floats be in the water at a time, and acted upon by the impinging stream issuing from the wheel's gate.

In order to prevent the water from overflowing the floats and wasting, they are to be immersed only

One-third of their depth, according to D'Aubuisson (1838, p. 329), Weisbach (1847, Vol. II, p. 213), Overman (p. 193), and

One-half of their depth, according to Dr. Young (1807, Vol. I, p. 322), Byrne (1851, p. 327), and Eytlewein (Tredgold, p. 210).

The thickness of the stream of water striking the float is one-third of the depth of the float according to D'Aubuisson (p. 233), Weisbach (Vol. II, p. 213) and Sam (p. 110), while Rankine (p. 187) gives one-fourth.

Digitized by Google

The thickness of the stream is to be never less than 6 nor over 10 inches per Spon (Div. 4, p. 1512), Overman (p. 192), and Blaine (p. 110); 4 to 6 inches per Weisbach; and 6 to 9 inches per Fairbairn (pp. 145–147).

The radial width or depth of the float or bucket is to be 15 to 18 inches per Haswell (1909, p. 566); 10 to 18 inches per Unwin and Blaine (p. 106); 15 to 20 inches per Bresse (p. 23); under 25 inches per D'Aubuisson (p. 333); 12 to 18 inches per Weisbach (Vol. II, p. 213); and 18 to 24 inches per Fairbairn (pp. 147).

Undershots are adapted to heads up to 4 feet per Scribner, Drake, Haswell, Pallett, Fairbairn, Byrne, Cullen and others, while Wm. Emerson (p. 198) referred to a grist mill with 16-foot head, and many undershots operated at Carthage, N. Y., from 1830 to 1850, on 8 and 9-foot heads (Guyot), while the wheels at Ellicott Mills (Evans, Part I, pp. 113, 115) had 11-foot head. Ellicott's table for undershots driving grist mills (Evans, Part V, p. 17) shows the wheels proportioned for heads of from 8 to 20 feet.

Parkin (1815) advised falls from 2 to 9 feet as most advantageous for undershots (Evans, 1832, p. 361).

There is no reason, save loss in economy, for restricting the head for an undershot to 4 feet, and that restriction has never held in the United States.

The wheel diameter is as great as is possible and never less then seven times the depth of the water as it strikes the wheel per Brewster (Vol. II, p. 147), and he gives (p. 149) Pitot's table for the floats as shown on page 150.

Fairbairn states that from 12 to 25 feet is the usual range for the diameter of undershots, that from 12 to 16 feet is more effective, and that in his own practice the wheels have

Digitized by Google

Wheel Diameter.	Depth of Float Board.		
Ft.	1 Ft.	1½ Ft.	2 Ft.
10	10	8	7
12	11	9	8
15	12	9	8
18	13	11	9
20	14	11	10
25	16	13	11
30	17	14	12
32	18	14	12

been from 14 to 18 feet, and that the number of floats is $12+1.33\times$wheel's diameter in feet (pp. 145–147). He also gives diameter $=46\sqrt{\text{fall}}\div$R.P.M.

Rankine makes the diameter of the wheel twice the head unless other conditions control (p. 186).

Lea gives 10 to 23 feet as the range of diameter for undershots (p. 293).

Appleton makes the wheel diameter equal to

$$19.1\times\text{rim speed in feet per second}\div\text{R.P.M.}$$

and the rim speed equal to $2.4\times$the square root of the head (Vol. II, p. 818).

Spon gives the following for the relation of the floats to the wheel's diameter (Div. 4, p. 1513):

Floats.	Diameter.	Floats.	Diameter.
	Ft.		Ft.
28	13.12	40	22.97
32	16.4	44	26.25
36	19.68		

Digitized by Google

Haswell gives an undershot using 17.5 cubic feet second and 25-foot fall, driving a 1500-pound trip-hammer, lift 12 to 18 inches, and making 100 to 120 blows per minute (1909, p. 571). According to Haswell's rule (on p. 566) the net power developed was

$$0.00066 \times 17.5 \text{ cu.ft.sec.} \times 25\text{-ft. head} \times 60 = 17.4 \text{ h.p.},$$

or about 32 per cent of the gross horse-power.

He states that " The volume of water required for a hammer increases in a much greater ratio than the velocity to be given to it, it being nearly as the cube of the velocity."

Guyot gave undershot wheels at Carthage, N. Y., from 1819–1840, as follows:

Blast wheel, 25 feet diameter by 6 feet wide, with gate 8 by 72 inches and head 9 feet.

Cinder crusher wheel, 14 feet diameter by 5 feet, gate 6 by 60 inches, and head 9 feet.

Drop hammer wheel, 6 feet diameter, with gate 150 inches of water, 9-foot head.

Axe grinding wheel, 8 feet diameter, 8 feet wide, gate 8 by 96 inches, 9-foot head.

Rolls wheel in nail factory, 25 feet diameter by 6 feet wide, gate 8 by 72 inches, 9-foot head.

Smeaton built a 27-foot undershot, at 8.5 feet second rim speed for oil mill in 1796, and it moved as regularly as though operating at only 3 feet second (Tredgold, p. 42).

Rennie, in 1785, tested an undershot on a 5.5-foot fall, the rim speed being 8.6 feet per second, diameter 15 feet, breadth 3 feet, buckets 15 inches deep, using 40.7 cubic feet second of water, and producing 6.86 effective horse-power at 29.5 per cent wheel efficiency (Beardmore, p. 20). He

Digitized by Google

tested, also, a wheel with about 4.75-foot fall, 9.05 feet second rim speed, 14 feet diameter by 3.75 feet wide, 14.25 inches depth of float, 5.5 net horse-power, or 22.2 per cent efficiency. Another wheel, 10-foot fall, 18 feet second rim speed, 14 feet diameter by 34 inches face, produced 8.9 net horse-power at 34.5 per cent wheel efficiency (*Ibid*).

Ellicott (Evans, 1895, Part V, p. 11) gives an 18-foot undershot, 3-foot fall, 4 feet width of wheel, 32 floats, 15 inches wide or deep, for a 4-foot stone.

The efficiency of undershot wheels in the use of water for power production is given as follows:

10 to 33 per cent, Overman; 31.45 to 33 per cent, Byrne; 35 per cent, Beardmore; 27 to 33 per cent, Drake, D'Aubuisson, Scribner; 25 to 50 per cent, Trautwine; 40 per cent the limit, Frye; 25 to 35 per cent, Merriman; 25 to 30 per cent, Ormsby; 33 per cent, Brewster, Templeton, Smeaton, Haswell, Neville; 22.2 to 35 per cent, Rennie's test; 20 to 25 per cent, Ball; 34 per cent, Abbott; 25 per cent, Donaldson; 20 per cent, Eagen's test and Wells; 12.5 to 33 per cent, Craik; 27 to 31 per cent, Franklin Institute Tests; 30 per cent, Horton; 30 to 34 per cent, Cullen; and 33 per cent the limit, Rankine.

Example: Given that an old undershot wheel had buckets 18 inches deep, and operated under a head of 9 feet, the gate being close to the wheel and constructed so as to avoid contractions. What was the amount of the water used, and the power produced, the wheel being 20 feet diameter and 10 feet wide?

The theoretical velocity due to 9-foot head is

$$8.02\sqrt{9} = 24.06 \text{ feet per second.}$$

Digitized by Google

The buckets being 18 inches deep, the depth of the stream is one-third, or 6 inches, and its width 10 feet, the breadth of the gate, so that the gate opening was 6 inches $\times$10 feet =5 square feet.

The theoretical discharge was 5 square feet $\times$24.06 feet per second velocity, or 120.3 cubic feet per second. If the coefficient of discharge was 95 per cent, then the actual discharge was $0.95 \times 120.3 = 114.3$ cubic feet second.

The gross horse-power was 114.3 cubic feet $\times$62.5 pounds $\times$9-foot head $\div$550 or 117.08, and at 33 per cent wheel efficiency the net product was 39 horse-power.

Smeaton's maxims for the undershot, overshot and breast wheels are

1. The effective head being constant, the power varies with the quantity of water used;

2. The quantity of water being constant, the power varies directly with the effective head;

3. The quantity of water being constant, the power varies as the square of its velocity;

4. The aperture being constant, the power varies as the cube of the water's velocity.

PONCELET UNDERSHOT WHEELS

The Poncelet undershot will not be discussed here as it was never in extensive use in America, and can be studied by reference to the old books.

The principles governing the undershot apply to the Poncelet. It was used on heads of 6 feet and under; had

Digitized by Google

rim speeds equal to about half of the water's velocity; was fed through a gate with contractions practically suppressed; had efficiencies of from 40 to 65 per cent, or much higher than the wooden undershot, and about the same as breast wheels; and differed from the simpler undershot in that its buckets were made of metal and curved.

OVERSHOT WHEELS

It has been shown on p. 117 that the coefficient of discharge of the gate at the overshot wheel varies from 62 to 100 per cent, and is usually much nearer, or quite, the upper than the lower limit.

The perimetral or rim speed of overshots is given as follows:

67 per cent of the speed of the water per Evans, Ellicott, Byrne, and Templeton; 55 per cent per Weisbach; 50 per cent per Drake; 50 to 60 per cent per Haswell; 33 to 50 per cent per Ferguson; or, expressed otherwise:

6.5 to 8.5 feet per second per Byrne; 6 feet, Scribner; 3, 5, 6.5 and 8 feet per Haswell; 2.5 to 10 feet per Weisbach; 3 to 4 feet per Pallett, " is proper " (p. 217), while 9.17 feet is " to the best advantage " (p. 221); 6 feet per Donaldson and Drake; 5.25 to 6.9 feet, Brewster; 2 to 4 feet, Grier; 6 feet for 30-foot wheel, 8.2 feet for 50-foot wheel, per Glynn; 5 feet, Leonard; 4.5 to 8 feet per Rankine; and 5 to 7.5 feet per second per Chambers. Smeaton recommended 6 feet for 24-foot wheel.

Evans, Edition 1795 (Part I, pp. 108, 109), gives the following examples of overshots:

Digitized by Google

Place.	Velocity of Water, Ft. per Sec.	Rim Speed Ft. per Sec.	Remarks.
Stanton, Del.....	12.90	8.20	"Wheel received the water well."
Stanton, Del.....	11.17	7.44	"Received the water pretty well."
Brandywine, Del.	12.16	10.20	"Throws out great part of the water by the back of the buckets."
Brandywine, Del.	14.40	9.30	"It receives the water very well."
Bush, Md.....	15.79	7.80	". . . ran too slowly . . ."
Bush, Md.....	14.96	8.80	"Wheel runs best when head is sunk a little."
Alexandria, Va...	16.20	9.10	"The wheel receives the water well."
	11.40	10.96	"Backs of the buckets strike the water, and drive a great part over."

Evans, 1895 (part V, p. 19), gives 550 feet per minute, or 9.17 feet per second as recommended by millwright Ellicott.

On p. 78 of Part I, Evans, 1795, is recommended the following overshot table:

Wheel Diam., Ft.	*Rim Speed, Ft. Sec.*	Head above the Wheel, Ft.	Add for Friction of Aperture, etc., Ft.	Total Head onto Wheel, Ft.	R.P.M.
10	6.92	1.64	0.1	1.74	13
12	7.57	2.00	.2	2.20	12
14	8.19	2.34	.4	2.74	11.17
16	8.76	2.68	.6	3.28	10.4
20	9.78	3.34	1.0	4.34	9.3
25	10.95	4.20	1.25	5.45	8.3
30	11.99	4.90	1.5	6.4	7.63

Evans, making the rim speed 67 per cent of the water velocity at the wheel's gate, adds to the head theoretically needed to produce that velocity as follows to provide for

Digitized by Google

" friction " in getting the stream onto the wheel, and the total " head " above the wheel:

0.1 foot for wheels of from 9 to 12 feet diameter, and

0.1 foot more for every foot increase in diameter for wheels from 12 to 20 feet diameter, and

0.5 foot more for every foot increase in diameter for wheels from 20 to 30 feet diameter.

Thus for a wheel 24 feet diameter, add to the theoretical head, to get the " head " onto the wheel,

0.1 for 12 feet $+0.1\times(20-12)+0.05\times(24-20)=1.1$ feet (Evans, 1895, Part II, pp. 25–26).

This rule is imperfectly quoted, without credit, by Templeton (1852, p. 98).

Craik (1870, p. 105), " many years since," built a large overshot for 9 feet rim speed per second, with a variable " head " of 4 feet and less, " which we have never been able to beat since." The larger the wheel the faster its rim speed.

Weisbach's discussion of rim speeds of overshots in feet per second, as given in Vol. II, pp. 192, 193, is digested as follows:

2.1 feet second for Smeaton's wheel model, 75 inches circumference, in 1752, 1753.

5 feet second is " more suitable " (p. 172).

10 feet second is found in " many wheels " (p. 172).

9.25 feet second, D'Aubuisson's test of 32-foot wheel.

14.3 feet second, Weisbach's test of 22.75-foot wheel, 3 feet wide, 48 buckets.

9.13 feet second, wheel used for pumping and hoisting.

5 feet second, 10.6-foot wheel, 30 buckets, Morin's test.

5 feet second, 13-foot wheel, Morin's test.

Digitized by Google

6 feet second recommended by Morin for wheels under 6 feet diameter and

8 feet second for wheels over 6.5 feet diameter.

7.5 feet second in tests of Elwood Morris showed nearly the same efficiency as when the speed was 4.5 feet per second, and

6 to 8 feet second speed of overshot's rim was recommended by Morris.

Enough has been shown to indicate that the low rim speeds, recommended by early English writers, are not representative of American practice; that speeds of 8 *to* 10 *feet per second are desirable except for very small wheels; and that the speed permissible is somewhat controlled by the number and disposition of the buckets. No one owning a large, expensive overshot would materially cut down the power capacity, and increase the percentage of gearing losses, in order to gain a slight increase in the efficiency.*

These conclusions, from American practice, are sustained by Bach's "Die Wasserrader" translated by Prof. Weidner of the University of Wis., and supplemented by Weidner's tests of a Fitz steel overshot wheel, as given in the University Bulletins 529 and 520, respectively (in 1913). It is to be noted that the following conclusion of Bach is based upon modern overshots with curved buckets and relatively small fractional losses in the wheel's bearings:

Page 143, "The chief conclusion . . . is that high peripheral velocities of the wheel do not cause such large losses at exit as was supposed. Experiments of the Author (Bach) confirm this result.

Page 179, "We see from this that, with a rational

Digitized by Google

design, the higher peripheral velocities do not cause such a marked decrease in the efficiency as is generally supposed.

Page 165, "A general rule for the value of v (the rim speed of the wheel) can not be given. It is a matter for the designing engineer to decide upon, after considering all the conditions, including the character of the plant which the wheel is to operate. The value $v=5$ feet (per second), which is often found in the literature on this subject, *must be considered inadmissible; 5 feet is too small in the majority of cases.*"

In studying the heads for overshot and breast wheels it is necessary to separate the total head or fall at the wheel into two parts, viz.: The "head," which represents the vertical fall above the wheel, and the "fall" which is generally identical with the wheel's diameter. Hence the origin of the term "head and fall." The "head" is actually the vertical distance from the water in the flume, at the sluice or wheel's gate, down to the center of the gate's aperture. There is also a fall from this aperture down into the wheel's bucket, but, since the receiving bucket is beyond the vertical center line of the overshot wheel, this small fall is comprehended in the "fall" when the latter is considered equal to the wheel diameter.

The "head and fall" for an overshot is actually less than the total fall or head at the wheel, as the wheel must hang *above* the tail waters. A ponderous overshot can not well be hoisted every time the tail water level rises, and, accordingly, its setting is stationary.

The "head" above the wheel is only partially available for power purposes. The allowance for "head" to be added

Digitized by Google

to the " fall " to get the effective head for power with overshots is as follows:

Leonard ignores the " head " entirely, calling the effective head or fall simply the wheel's diameter (1848, pp. 24, 25).

Scribner calls the diameter the fall which is effective in power computations (p. 155).

Haswell calls the effective head or fall the distance from the center of the opening in the sluice gate down to the tail water (1909, p. 565), and on p. 563 he calls the effective fall as $\frac{1}{3}$ *head+fall.*

This last rule of Haswell, or $\frac{1}{3}$ *head+fall,* as being effective, is endorsed by Appleton, while

Evans, Templeton, Cullen and others use $\frac{1}{2}$ *head+fall,* as representing the head or fall effective for power making.

The Author adopts " $\frac{1}{2}$ head+wheel diameter " as the *effective head and fall for overshots, as it is manifest that the clearance between the wheel and the tail water is never utilized for power.* There is much force in the argument of many that only the diameter can be considered as effective.

We next discuss the efficiency of overshot wheels as given by the old writers, and must remember that, in most instances, no mention is made of the effective head used, so that it does not generally appear which of the following was adopted:

$\frac{1}{3}$ head+fall;
$\frac{1}{2}$ head+fall;
Head+fall;
$\frac{1}{3}$ head+diameter;
$\frac{1}{2}$ head+diameter;

Digitized by Google

Diameter of wheel;
Total head + fall;
Center of sluice opening to tail level, or
Center of sluice to bottom of wheel.

With turbines the efficiency is based on the actual difference of level between the head and tail waters at the wheel when in operation. Why should any other rule be followed for an overshot?

It is necessary to remember that the methods for measuring the water and the resulting power were not as exact in the old days as now, so that the old efficiencies must not be taken too seriously. If engineers and millwrights knew more about the circumstances attending the efficiency calculations for old tests of overshots, their notion as to the superiority of that wheel would be modified. The superiority of the overshot over all other wheels except turbines is shown and accepted, and its superiority in economy over many of the earlier turbines is conceded. Its high economy at low and non-commercial speeds is recognized. Its very high efficiency in actual, commercial, every-day mill work is properly doubted. These comments do not hold for the modern steel overshot, with curved buckets—whose very high efficiency is clearly established, but, rather, apply to the old wooden overshots with elbow buckets.

No one will deny that the efficiency of overshots at restricted gates, i.e., when using only part quantity, is nearly as high as when fully supplied with water, and this can not be said to hold for turbines.

The literature relating to the efficiency of Overshot Wheels is here summarized:

Digitized by Google

Author.	Date.	Efficiencies.
Smeaton.....	1752–3	67% with model 2 ft. diameter.
Borda.....	.....	2.67 times the undershot's efficiency.
Evans *.....	1795	1.75 times the undershot's efficiency.
		1.4 times the breast's efficiency.
		1.08 times the pitchback's efficiency.
Gregory.....	1806	2.6 times the undershot's efficiency.
		2.4 times the undershot's efficiency.
		1.75 times the breast's efficiency.
Brewster.....	1806	67 to 80%
Parkin *.....	1815	Less than 50% for 16-ft. wheel, 20-ft. fall.
Jamieson.....	1827	80%
Franklin Insti.*...	1829	67 to 82% on 10-ft. wheels.
		75 to 84% on 15.-ft. wheels.
		80% with the best large wheels.
		Elbow buckets are most efficient.
Abbott *.....	1835	68%
Morin.....	1836	69%, wheel 7.47 ft. diameter.
		65%, wheel 10.6 ft. diameter.
		25 to 60%, wheel 13 ft. diameter.
Jamieson.....	1836	2.5 times the undershot's efficiency.
D'Aubuisson.....	1838	70% in general, 77% on Mallett's test.
Weisbach.....	1848	25 to 80% on tests; range 65 to 84%.
		78% on test by Weisbach.
		80% for 35-ft. wheel or larger.
		Small wheels are less efficient than large.
Leonard *.....	1848	65% in general.
		48% for 9-ft. wheel; 62%, 14 ft.
		77% for 30-ft wheel.
Hebert.....	1848	67%, or double the undershot.
Byrne.....	1851	62.9 to 66% based on the entire fall.
		80% based on the diameter only.
		Double the undershot's efficiency.
		Highest with small "heads" and big "falls."
Overman.....	1851	70% is the limit; range 20 to 70%.
		65% with curved buckets.
Templeton.....	1852	67%
Tomlinson.....	1854	2.6 times the undershot's efficiency.
Haswell *.....	1854	66%
Fairbairn.....	1859	73.3% for good wheel.
Rankine.....	1859	66 to 80%
Neville.....	1860	67%

* Denotes American writers.

Digitized by Google

Author.	Date.	Efficiencies.
Beardmore.....	1862	64.8%; 60 to 65% range.
Wells *.....	1869	60%
Cullen.....	1871	73%
Spon.....	1871	75% on the average; range 75 to 80%
Chambers.....	1872	60%, fair allowance.
		70%, doubtful if ever obtained.
		75%, highest ever mentioned.
Donaldson.....	1876	75%
Scribner *.....	1878	66% based on total fall.
		60 to 80%.
Drake *.....	1879	66%, range 60 to 80%
Cope *.....	1882	65% is the best.
Glynn.....	1885	73 to 80%
Robinson.....	1887	85 per cent is a safe estimate.
Emerson *.....	1894	67% is the limit.
Blaine *.....	1897	60 to 75%
Lineham.....	1904	75% based on total fall.
Holliwell.....	1904	66%
Trautwine *.....	1907	67 to 75%
Horton *.....	1909	60%, best 85%
Haswell *.....	1909	66% generally; 60 to 68% range.
		75% for speed of 3 ft. per second.
		70% for speed of 6½ ft. per second.
Merriman *.....	1911	60 to 88%
Fitz *.....	1912	60 to 75% for wooden wheels.
Oliver *.....	1913	A little better than the breast wheel.
		15 to 25% is lost in the gearing.
Frye *.....	1913	75% is the limit.

* Denotes American writers.

"It is unfortunate for the world's progress that the records and conditions of failures are seldom made known. The record of a failure, while of great value from an educational standpoint, may considerably injure the reputation of an engineer or manufacturer, and consequently results of tests and experiments, *unless fully satisfactory*, are seldom published or known except by those closely interested. For this reason, *the published tests of water wheels usually represent the most successful work of the maker and the best prac-*

Digitized by Google

tical results he has been able to secure" (Meade, p. 369). This comment applies to turbines and to all other forms of water wheels.

In every-day mill work the commercial efficiency of a wooden overshot with elbow buckets, operating at about 9 feet rim speed per second, is about 65 per cent although it may go to 75 per cent if the "head" is small, relatively to the diameter, with a reduction in rim speed, and the work done by the wheel is correspondingly curtailed. This observation relates to the power produced on the wheel's shaft, and does not include transmission losses.

Overshots are adapted to combined heads and falls as follows:

Trump, Risdon and Alcott state that overshots are seldom used on falls under from 15 to 20 feet, and give a 16-foot wheel diameter for a total 20-foot head and fall.

Drake, Byrne and others give the overshot as available for heads and fall of 10 feet and upwards.

Appleton gives 28 inches "head" for wheels of 13 to 20 feet diameter.

Leonard makes the wheel diameter 3 feet less than the head and fall.

Weisbach gives overshots ranging from 8 to 64 feet diameter. It is generally understood that the heads and falls for which wheels are adapted are

Undershots, 4 or 5 feet and under;
Breast wheels, 4 or 5 to 10 feet; and
Overshots, 10 feet and upwards;

although undershots are built for falls of at least 16 feet, breasts are seldom built for falls exceeding 10 feet, and overshots are sometimes used on heads below 10 feet.

Digitized by Google

The following are examples of overshots:

The "Old Town Grist Mill," on Briggs brook, in the heart of New London, Conn., built in 1650, and continuously operated down to after 1914, has an 18-foot overshot 6 feet clear width, with 48 elbow buckets, each 16 inches deep.

This mill has 2 runs of granite stones and a corn cracker or crusher. It grinds rye and corn meal, feed, graham, cracked corn, cob-meal, provender, etc. The 20-horse-power wheel operates the 2 stones, or one stone and the corn cracker at a time (R. C. Smith).

The Bullington Mill, Axton, Va., has a 12-foot overshot, 5-foot face, operating a buhr flour mill, the wheel buckets being two-thirds filled ("Mill. Rev.").

The old Hampton grist mill, near Towson, Md., on Peterson creek, a colonial mill operating until about 1910, had two 15.5 feet overshots, one 4-foot 10 inches, and the other 5 feet 6.5 inches clear width, the former with 9 inches and the latter 8 inches elbow buckets, 27 inches "head" on each, operating two runs of 4-foot stones and accompanying machinery, and producing a combined 39.2 horse-power (Whitham).

The old Poge mills on Back Creek, near Roanoke, Va., had (1913) two old overshots as follows:

One 18 feet diameter and 5-foot face, 10-inch elbow buckets, 3-foot head, 32.7 horse-power, drove two runs of 4-foot buhr stones, etc., in a grist mill.

The other was 15 feet diameter and 6.5-foot face, 10-inch buckets, 30-inch head, 32.4 horse-power, and operated a 48-inch circular saw and log carriage in a country saw mill (Whitham).

The old Haxall buhr mills at Richmond, Va., operated

Digitized by Google

six 18-foot overshots, 12 feet net width, under a "head" of 4 feet, each with gates 12 feet by 4 inches usual lift, with contractions nearly suppressed and produced about 550 net horse-power on the wheel shafts. The mill made 1200 barrels of flour per day, or 45.8 horse-power per 100 barrels. It had 20 runs of 3.5 and 20 of 4-foot buhrs, operating on the gradual reduction system just before the advent of the roller process (W. S. Lockett).

The old Gallego mill in Richmond, Va., famous in the West India trade, was built in 1789 under Oliver Evans' design, and had, in 1887, 23 runs of 5.5-foot buhrs operating at 140 R.P.M., some being used on middlings. The mill operated by three overshots, each 32 feet diameter by 12 feet effective width. The three gates were each 12 feet wide and lifted, in ordinary mill operation, 4 inches. They were constructed for a discharge coefficient of 90 per cent. The elbow buckets were 12 inches deep. The wheels produced about 530 horse-power. The capacity of the mill was 1500 barrels of flour daily. The power per 100 barrels daily, including transmission, was about 35.3 horse-power. The power per run was 23 horse-power, but some of these runs were on middlings (W. S. Lockett).

The old Knox mill at Fredericksburg, Va., had three 16-foot overshots on a 20-foot head and fall. Two were 11 feet and one 15 feet net width. The elbow buckets were 17 inches deep and spaced 19 inches on the perimeter (Whitham).

The Henry Burden overshot at Troy, N. Y., was built in 1838 to operate a rolling mill and machine shop. It was 60 feet diameter by 22 feet net width, with buckets only 6 inches deep. It made from 1.5 to 2 R.P.M. and about

Digitized by Google

600 horse-power, drawing its supply from the Wynantskill ("Engr. Rec.," Vol. LXXI, No. 24).

The overshot at Cyfarthfa Iron Works, in South Wales, was 50 feet diameter by 6 feet wide, with 156 buckets. It made 2.5 R.P.M. and was built in 1800 for blowing furnaces (Glynn, p. 83).

Donkin, of London, built a 76.5-foot overshot, 2-foot face, 160 buckets, 30 horse-power, and also one 80 feet diameter by 8-foot face (Glynn, p. 84).

The Newlin flour mill on Fishkill creek, N. Y., is given by Haswell (1854, p. 179, and Scribner, p. 160), as producing 5 barrels, with three 4.5-foot buhr stones, at 130 R.P.M., and elevating 400 bushels of grain 36 feet per hour, with an overshot 22 feet diameter by 8-foot face, the gate being 80 inches wide and lifted 1.75 inches. The wheel had 52 buckets, 12 inches deep, and made 3.5 R.P.M. or 4 feet per second rim speed. The head on the gate was 2.07 feet.

The Peter Townsend furnace, Monroe, N. J., had one 24-foot overshot, 6 feet wide, with 70 buckets, 14 inches deep. The stream of water was 0.75 by 51 inches, under a head of 6.5 feet. The wheel made 4.5 R.P.M. (Haswell, 1854, p. 179).

A flour mill in Richmond, Va., had five 18 by 14.5-foot overshot wheels, 15 inches depth of buckets, 2.5-foot head of water, gate opening per wheel 2.5 inches by 14 feet to produce 30 barrels of flour per hour (Haswell, 1854, p. 304).

Other overshot wheels in mills at this present time are:

12 feet diameter by 9.5-foot face at Wannamaker's grist mill, Kresgeville, Pa.

Digitized by Google

17 feet diameter by 4-foot face at Yingling's grist and saw mill, Pleasant Valley, Md.

24 feet diameter by 3-foot face at Meyer's roller mill, Logantown, Pa.

24 feet diameter by 5-foot face at Tissue Paper Mill, Beaver Valley, Pa.

The buckets of an overshot wheel should not be so filled as to waste water until it has performed all the work possible. The buckets of such overshots as were in general use in 1790 to 1860 were built of wood and of the elbow pattern, as shown by the old writers, and as found to-day in remote localities.

The percentage of bucket filling is given by the various writers as follows:

33 per cent per Haswell (1909, p. 564) and Pallett (1866, p. 218).

33 to 50 per cent per Fairbairn (1859, p. 144).

50 per cent per Appleton (1852, Vol. I, p. 834), and Weidner (p. 127). who says:

" Variations in the discharge within reasonable limits, so that the coefficient of filling does not exceed approximately *one-half*, has little, if any, effect on the wheel efficiency."

64 per cent per Scribner (p. 157).

67 per cent per Glynn (1885, p. 131); Fairbairn (1859, p. 121), who said, " . . . in general it is not advisable that the buckets should ever be more than two-thirds filled with the average supply of water "; and per Rankine (1859, p. 182), Brewster (1806, Vol. II, p. 193), Grier (1842, p. 205), and the Bullington Mill at Axton, Va. ("Mill. Rev.," Oct., 1915).

Haswell (1909, p. 564) advises shallow buckets, recom-

Digitized by Google

mending 10 to 12 inches depth, and 15 inches at times, and a great number of small ones (p. 563).

Blaine advises 10 to 18 inches depth of buckets, which is their perimetral spacing also.

D'Aubuisson advised buckets as follows (p. 371):

Diameter, Ft.	No. of Buckets.	Diameter, Ft.	No. of Buckets.
9.84	24	26.25	76
13.12	36	32.81	96
16.40	44	39.37	108
19.69	56		

In this connection D'Aubuisson made the buckets 1.049 feet apart on the perimeter, and 0.984 feet deep, elbow shape.

Appleton (Vol. II, p. 797) advises:

Diameter, Ft.	No. of Buckets.	Diameter, Ft.	No. of Buckets.
12	24	32	72
17	36	38	84
21	44	40	92
25	52	42	96
28	60	46	108

Spon (Div. 5, pp. 1912, 1913) advises 16-inch bucket depth and the same for the perimetral spacing; 6 to 8 inches thickness of the stream of water approaching the buckets; and " heads " for total heads and falls as follows:

	Feet.
24-inch " head " for total head and fall of 10	–13.33
28-inch " head " for total head and fall of 13.33	–20
32-inch " head " for total head and fall of 20	–23.33
36-inch " head " for total head and fall of 23.33	–26.67

Digitized by Google

Rankine (p. 182) makes the bucket depth range from 12 to 21 inches, with 15 inches usually.

The quantity of water which an overshot can use is given by Rankine (p. 182) as follows:

$$Q = 0.67\, uLb\left[1 - \frac{b}{2r}\right], \text{ in which}$$

Q = cubic feet of water per second;
u = rim or perimetral speed in feet per second;
L = clear length of bucket in feet (axially);
r = radius of the wheel in feet;
b = radial depth of the elbow bucket in feet.

Example: Wheel 16 feet diameter, or $r = 8$ feet.

Rim speed 9.1 feet second $= u$. The clear length of a bucket or width of the face of the wheel = 15 feet $= L$.

The depth of the bucket, $b = 17$ inches $= 1.42$ feet. Then

$$Q = 0.67 \times 9.1 \times 15 \times 1.42 \times \left[1 - \frac{1.42}{2 \times 8}\right] = 117.4 \text{ cu.ft.sec.}$$

If the " head " above this wheel is 4 feet, and the sluice gate is 15 feet wide with 90 per cent discharge coefficient, then the gate lift to supply the needed water is found as follows:

$Q = 117.4 = 0.90 \times 15$ ft. wide $\times$ lift of gate $\times 8.02 \sqrt{4\text{-ft. head}}$,
whence lift = 0.54 feet, or about 6.5 inches.

In this example the effective head and fall is

$\frac{1}{2}$ of the 4-foot head + the 16-foot wheel diameter = 18 feet.

Calling the efficiency 67 per cent, the net power was

117.4 cubic feet second $\times$ 62.5 pounds per cubic foot $\times$ 18-foot head and fall $\times$ 67 per cent efficiency $\div$ 550 = 160.

Digitized by Google

Pitch-back wheels are overshots having the water flume and gate approaching from the side in which the water is laid onto the wheel, rather than having the water brought over the top of the wheel. For that reason it sometimes occurs that the diameter of the pitch-back is equal to or greater than the combined head and fall. The speed, discharge coefficients of gates, and efficiencies of the pitch-back and overshot are almost identical, as is also their bucket design.

Rankine makes his rule, just given, for the amount of water used by overshots apply also to pitch-back and breast wheels.

BREAST WHEELS

It has been stated on p. 163 that breast wheels are generally adapted to heads of from 4 to 10 feet. When the water enters the buckets at about the elevation of the shaft it is termed a " breast wheel "; when the entrance is below that elevation the wheel is termed a " low-breast "; and when the water is received above the elevation of the shaft, the wheel is termed a " high-breast."

The forms of breast wheels, like overshots, have a " head " and a " fall," and the " head " acts by impulse upon the buckets (as with the undershot), while the " fall " acts by gravity (as with the overshot). Hence the breast wheel is said to be a combination of the under and the overshots, and to be suited to the heads and falls intermediate between those specially suited for their uses.

The breast wheel has its weighted portion built in a curb

Digitized by Google

or concave, concentric with its axis, so as to hold the water in the buckets until the water reaches the tail level.

The coefficient of discharge for the gate of the breast wheel is almost or quite 100 *per cent,* as the contraction is generally suppressed, and the stream can fall freely into the empty buckets one at a time.

Ferguson advises that the rim or perimetral speed be from 33 to 50 per cent of the velocity of the water at the gate; Grier, 43 per cent; Evans, 58 per cent plus the acceleration due to the fall between the gate and empty bucket; Rankine, 50 per cent; Haswell, 50 to 60 per cent; while Byrne and Templeton advise 67 per cent.

Fairbairn recommends a rim speed of from $3\frac{1}{2}$ to 7 feet per second; Leonard and Weisbach, 5 feet; Donaldson, 6 feet; Cullen, 6 to 8 feet; and Rankine from 6 to 12 feet.

The rim speeds of breasts and overshots are about the same, or around 9 *feet per second in American practice.*

The effective head and fall, as for overshots, is given as $\frac{1}{3}$ of the head+the fall, according to Haswell and Appleton; and $\frac{1}{2}$ of the head+the fall, according to Evans, Cullen and others.

The Author recommends $\frac{1}{2}$ *head+fall as being effective,* the " head " and " fall " meaning as discussed on p. 181.

Breast-wheel efficiencies are given as follows:

Jamieson	1827	50 to 60% wheel efficiency
Beardmore	1862	55%
Scribner	1878	45 to 50%
Haswell	1909	45 to 65%
		60 to 68% for high-breasts.
Frye	1915	60 to 65%
Merriman	1914	60 to 88%
Trautwine	1910	50%
Ormsby	1851	50%
Pallett	1866	Half that of overshot.

Digitized by Google

Hughes	1851	Half that of Jonval turbine.
Drake	1879	45 to 50%
Ferguson	1806	Less than that for an overshot
Templeton	1852	50%
Overman	1851	40% is the limit.
		22 to 60% range.
Leonard	1842	48 to 77%
Byrne	1851	67%
Neville	1863	50% average efficiency.
Abbott	1835	52%
Fairbairn	1864	75% for high-breast.
Weisbach	1848	53 to 65% per Elwood Morris.
		60 to 69% per Morin.
		48 to 52% per Eagen.
		52 to 80% per Mulhouse.
		57 to 63% per Franklin Inst.
Moore	1880	50%
Holliwell	1904	60%

It is evident that the efficiency will vary with the type of the breast wheel, being but little better than an undershot for "low-breasts," or about 35 *to* 40 *per cent;* 45 *to* 55 *per cent for the ordinary "breast" wheel; and* 60 *to nearly* 65 *per cent for "high-breasts"—which closely approach the "pitch-back" wheel.*

Evans, 1795 (Part II, p. 20), suggested the following breast wheel for a run of 5-foot stones:

Wheel diameter, 15 feet; 10-foot total fall divided into a 6.2-foot "head" and a 3.8 foot "fall"; $\frac{1}{2}\times 6.2+3.8=6.9$ feet effective head and fall; 20.16 feet second water velocity for 6.2-foot head; $20.16\times 0.577=13.07$ feet second rim speed of the wheel, corresponding to 16.6 R.P.M. of the 15-foot wheel; stone and wheel geared 6 to 1; stone at 99.6 R.P.M.; 16.2 cubic feet second of water needed; and canal or head race section 10.8 square feet, or canal velocity 1.5 feet per second.

Digitized by Google

Evans, 1795 (Part V, p. 18), gave millwright Ellicott's views of breast wheels for a run of stone as follows:

Eight-foot head and fall for a low-breast wheel of 18 feet diameter, with 56 buckets, the face or width of the wheel being 9 inches for each foot of the stone's diameter; and 12-foot head and fall for a " middling " breast wheel, 18 feet diameter, having 8 inches width for each foot of the stone's diameter; and 3-foot head plus 10-foot fall for a high-breast wheel, 16 feet diameter, 48 buckets, and 7 inches of width for each foot of diameter of the stone.

Brewster, 1806, advised a 20-foot wheel for a 10-foot head and fall.

Glynn, p. 93, gives a breast wheel at the Belper cotton mill, 12.5 diameter, 43 feet wide, 24 floats.

Fairbairn found that the relation between the cubic feet of contents of a bucket and the square feet of entrance to the bucket for water should be in the ratio of 4.8 to 1 for breast wheels; but when the breast wheel receives the water 10 or 12 degrees above the center, the ratio is 3 to 1; while the depth of the bucket is about three times the net width of the opening between the lips of the buckets (Glynn, p. 94).

The old 1822 breast wheels at the Fairmount water works of Philadelphia were

One 15 feet diameter × 15 feet wide, under 1-foot head and 7-foot fall, 11.5 R.P.M.

Two 16 feet diameter × 15 feet wide, under 1-foot head and 7.5-foot fall, 13 R.P.M.

The wheels stopped an average of sixty-four hours per month due to the back water exceeding 16 inches. They

Digitized by Google

were replaced by Jonval turbines in 1849 which had nearly twice the efficiency (Report of 1853).

Fairbairn constructed the following breast wheels (Beardmore, p. 19).

Fall, Ft.	Cu.ft.sec. of Water.	Diameter of Wheel, Ft.	Breadth of Wheel, Ft.	Bucket Depth, In.	Rim Speed, Ft. sec.
10	.....	18	18	22	5.66
9	116	16	21	24	
7.83	.....	16	20	21	6.41
9.5	45	16	18	20	5.5
8	.....	16	14.8	21	6.25
8	.....	15.5	17.5	20	5.54

Emerson (1894, p. 72) tested a breast wheel 16 feet diameter by 13 feet wide, with buckets 18 inches deep, the head and fall being 12 feet. It produced 28.08 horse-power.

Haswell (1854, p. 179) gives a 24-foot 4-inch high-breast wheel, 20 feet 9 inches wide, with 70 buckets, 15.75 inches deep, at 4.5 R.P.M. driving the Rocky Glen cotton factory at Fishkill, N. Y. The mill had 6144 self-acting mule spindles, 160 looms on 27-inch print cloths, made of No. 33 yarn (33 hanks per pound) and produced 24,000 hanks in eleven hours. The total head and fall was 20 feet, of which the " fall " was 16 feet.

At Carthage, N. Y., a 10-foot breast wheel, 3.5 feet wide, with the head and fall about 9 feet, the " fall " being 7 feet, with the gate opening 42 by 8 inches and 2-foot " head," drove a blast for an axe factory (Guyot).

At New Hope, Pa., are low-breast wheels lifting water from the Delaware river into the Lehigh canal during seasons of low flow (Whitham, 1918).

Byrne (1851, p. 328) gives a breast wheel table (here abbreviated) as follows:

Digitized by Google

Head and Fall, Ft.	Floats.		Diameter of Wheel, Ft.	Rim Speed in Ft. sec.
	Breadth, Ft.	Depth, Ft.		
4	0.69	6.20	6.02	4.36
6	1.03	2.25	9.02	5.35
8	1.37	1.10	12.04	6.17
10	1.71	0.77	15.04	6.90

Blaine (p. 107) advised buckets to be spaced 5 to 8 inches for high, and 9 to 12 inches for low-breast wheels.

Rankine gives the rule quoted on p. 169 for the water used by either breast or overshot wheels.

Haswell (1909, p. 568) makes the distance between two buckets from 1.3 to 1.5 times the " head " over the gate for wheels of low velocity, and more for higher speeds, and the depth of the buckets from 10 to 15 inches. The depth of the stream of water admitted to the buckets is nearly equal to their spacings. The wheel is speeded to have the buckets from 50 to 63 per cent filled. Rankine makes the bucket fill 67 per cent.

Elwood Morris on the tests of a 20-foot breast wheel for the Franklin Institute in 1829–30 found:

Head, Ft.	Fall, Ft.	Efficiency with	
		Elbow Buckets, Per Cent.	Radial Buckets, Per Cent.
0.75	17.00	73.1	65.3
	13.67	65.8	62.8
4.29	10.96	54.4	32.9
2.00	7.00	62.0	53.1
1.00	3.67	55.5	53.3

The leakage of water between the breast wheel and its curb is from 10 to 15 per cent according to Haswell (1909, p. 569).

Digitized by Google

TURBINE WHEELS

"A turbine is a motor for utilizing the energy of the water by causing it to flow through *curved buckets* or channels on which it exerts a reactionary pressure constituting the motive force.

"As distinguished from a water wheel, in the older and narrower sense of the word, a turbine may be defined as a water wheel in which a motion of the water relatively to the bucket is essential to its action.

"A turbine consists essentially of a ring, or a pair of rings, to which are attached *curved vanes* arranged uniformly round the circumference revolving on a shaft or spindle to which the ring or pair of rings is connected by a boss and arms, or by other suitable means" (Bodmer, 3d Ed., p. 24. See, also, Knight, III, 2256; Innes, 3d Ed., p. 37; Rankine, art. 171; Sam, p. 111, etc.).

"A turbine may be defined as a water wheel in which the water is admitted to all the vanes or buckets simultaneously. It is thus distinguished from vertical water wheels, which receive the water at the top or one side only, and from impulse wheels, which receive a spouting jet or jets from nozzles directed tangentially against the perimeter of the wheel.

"The component parts of a turbine are the 'runner,' the 'case,' the 'gate' or 'gates,' and the 'guides.' Commonly the gates and guides are included in the 'case.' The runner is that portion of the turbine which revolves. It comprises the vanes, the crown plate, partition plates or rim bands, which cover, sub-divide, or strengthen the vanes, and the power shaft. The term 'bucket' is applied to the

Digitized by Google

passage for the water in the runner. The vanes or floats are the partitions separating the buckets and forming the runner. The term 'buckets' is also often used to signify the vanes. The 'chutes' are the openings through which the water passes into the wheel, and the 'guides' are the partitions separating the chutes. The gates serve to shut off and regulate the supply.

"The flow of water through a turbine may be directed either radially inward or outward or parallel to the axis, or inward and parallel, or inward, parallel, and outward. The representative type of these several classes:

"Tangential flow: Barker's mill.

"Parallel flow: Jonval turbine.

"Radial outward flow: Fourneyron turbine.

"Radial inward flow: Thompson vortex turbine; Francis turbine.

"Inward and downward flow: central-discharge scroll wheels and earlier American type of wheels; Swain turbine.

"Inward, downward, and outward flow: American type of turbine" (Horton's "W. S. and I. P.," No. 180, p. 9).

Segner, of Göttingen, and, more recently, Euler, in 1752, made a study of reaction wheels. Euler's studies led to the construction in 1754 of a turbine, much like the later Fontaine, and set up many of them with improvements (Bresse, p. 69).

Oliver Evans showed a model of his reaction wheel to the Legislature of Maryland in 1786 and obtained a patent therefrom, and he observed in 1795 that Rumsey in Europe had then obtained a patent for a similar one (Evans, II, 34).

Benj. Tyler obtained a turbine patent in the United States in 1804, and this is quoted in full by Emerson in his

Digitized by Google

1894 edition. Ephriam Hubble also obtained a U. S. patent in 1808.

Abroad there seems to have been but little turbine activity after Euler's time until Burdin constructed his reaction turbine in 1824, after the Euler type. Fourneyron, inspired by Burdin, brought out his well-known design (Bresse, p. 69) in 1827, in France ("W. S. & I. P.," 180, p. 10).

Poncelet's turbine was brought out in 1826, Parker's in the U. S. in 1828, Wing's in the U. S. in 1830, St. Blaisen's and Jonval, in 1837, S. B. Howd's in the U. S. in 1837, Parker's 2d design in 1840, Boyden's in 1844, Jagger's in 1852, Alonzo Warren's in 1853, John Tyler's in 1855, A. M. Swain's in 1855 and 1862, American in 1859, Leffel's in 1866, Wemple's or Lesner's in 1871, Victor's in 1872, Risdon in 1874, Helmer or Rome in 1876, etc. Besides these there were very many other turbine designs in this country between 1840 and 1860, as is well noted in Francis' "Lowell Hydraulic Experiments," edition of 1855, as follows:

"A vast amount of ingenuity has been expended by intelligent millwrights on turbines; and it was said, several years since, that not less than 300 patents relating to them had been granted by the U. S. Government. They continue, perhaps, as much as ever, to be the subject of almost innumerable modifications. Within a few years there has been a manifest improvement in them, *and there are now* (1855) *several varieties in use, in which the wheels themselves are of simple forms, and of single pieces of cast iron, giving a useful effect approaching* 60 *per cent of the power expended.*"

"The number and variety of forms of these wheels

Digitized by Google

(reaction turbines) is so great that it is out of the question to enumerate them all in this work. The great variety of this kind of water motors at present in use, each claiming peculiar advantages, is an object which claims the attention of the engineer. All of these claims may be easily examined by means of the friction-brake . . . and there is no way of arriving at safe conclusions but by the use of the friction-brake" (Gihon's "Overman," 1851, pp. 315, 316).

"Within the last ten or fifteen years a numerous tribe of reaction (turbine) wheels have sprung into existence . . . " (Hughes, 1851).

As already noted, nearly every foundry near a water power had its own turbine design. Many of these early wheels were never catalogued nor tabled, although they are occasionally met in remote localities, and can be measured and tested.

The only reason for alluding to turbines in this book is that many grants of indefinite water rights were developed with turbines, and a study of the early designs is of value in connection with the doctrine of practical location and interpretation. Thus, at a remote point in the woods of Wisconsin in 1858, many miles away from a railroad, where the settlement consisted of only a few houses, and in a district where the fields had to be cleared in order that wheat and corn could be grown, a water grant for "two runs of stones and a corn cracker" was given. Manifestly this was a grist and not a merchant mill grant. In construing this grant a man was found who had worked in the mill in 1862. He testified that it then operated by a turbine, and that an abandoned turbine was in the yard alongside. The head and fall as developed in 1916 is 9 feet. It is believed that

Digitized by Google

the head and fall which would have been reasonably developed in 1858 was 7 feet. The water granted had to develop about 35 horse-power. Calling the turbine efficiency 65 per cent for that date, the water granted amounted to about 64 cubic feet per second.

Too much reliance is not to be placed upon the early efficiency tests of turbines, since the methods used were not as accurate as obtaining to-day. In studying turbine efficiencies, tests later than about 1880 will not be considered here. The published turbine efficiencies, obtained prior to 1880, as gathered by the Author, are here given:

According to Bennett's " D'Aubuisson," the first turbine actually tested was a Fourneyron of 6 horse-power in 1827. It is claimed to have made 80 per cent efficiency. The second Fourneyron was built in 1831 and produced from 7 to 8 horse-power. Shortly before this period " The Society for the Encouragement of National Industry " had offered a 6000-franc prize for " the best application, on a *great* scale, of the hydraulic turbine, or *wheels with curved floats*, of Bélidor, to mills and manufacturers." Fourneyron won this prize as noted in a Bulletin of the Society in 1834. Fourneyron in that year built a turbine for a spinning mill near Paris, and later others for use in France and Germany. He built a 13-inch turbine for a 354-foot fall, which developed 40 horse-power. In 1838, he installed four turbines near Paris in the mill of St. Maur, each driving ten mill stones (pp. 419, 420).

Other tests at various places of the Fourneyron turbines before 1840 by Morin, as given by D'Aubuisson (pp. 430–433), showed 69.6, 79, 76.9 and 78 per cent efficiencies.

Along about this time tests of " duct-wheels or roues

Digitized by Google

à coloirs" showed 67 per cent and of Carnot's denaids, 70 to 75 per cent efficiencies.

D'Aubuisson, who wrote in 1838, finally concluded that, "It (the efficiency) is about 70 per cent for good vertical wheels and turbines."

Coming now to turbine performances in the United States, the first tests available were made by Elwood Morris at the Rockland cotton mills and at the duPont works on the Brandywine in Delaware, upon Fourneyron turbines, and reported in the "Journ. of the Frank. Inst." for 1843. One turbine, 56 inches diameter, 6-foot fall, used 1700 cubic feet of water per minute at 71 per cent efficiency. The other turbine gave 75 per cent. The comment regarding these tests was, "The experiments on one of these wheels indicates a useful effect of 75 per cent,—a result as good as that claimed for the practical effect of the *best overshot wheels*, which had heretofore in this country been considered unapproached in their economical use of water."

Following these experiments by Morris were the tests at Lowell, Mass., of Boyden turbines at the Appleton and the Boott mills in 1844 and 1846 where the efficiencies obtained were 75 and 88 per cent. respectively (Mahan's "Bresse," pp. 141, 142.)

American inventors did not go to the expense of turbine tests at this period, but claimed efficiencies as follows:

The Lansing, Parker, Vandewater and Howd are rated as first-class turbines by Hughes, who wrote from 1848 to 1851, and were claimed to have about 65 per cent efficiency.

The Parker is given 66 per cent efficiency by Leonard, who wrote in 1848. Byrne published in 1852 turbine

Digitized by Google

tables prepared by his brother, who died in New York in April, 1851, based on 60 per cent efficiency. Hughes, 1855, issued a table of the Jagger turbine of 1852 showing 65 per cent efficiency. The Alonzo Warren turbine of 1853 was listed in his wheel book of 1858 as having 75 per cent efficiency.

Robert E. Horton calls the early American turbines and also those of the Jonval type as having from 60 to 70 per cent efficiency (Potsdam Lecture in 1910).

The next American tests available were conducted by Henry M. Birkinbine at the Fairmount Water Works in Philadelphia in 1859 and 1860 to determine which make or type of turbines should be installed. The results are published in the Report of the Water Bureau for 1861. The best efficiencies of the individual wheels are here tabulated:

	Per Cent.
Stevenson's second wheel	87.77
Geyelin's second wheel	82.10
Andrews and Kalbach's third wheel	81.97
Collins' second wheel	76.62
Andrews and Kalbach's second wheel	75.91
Smith's Parker's fourth trial	75.69
Smith's Parker's third trial	74.67
Stevenson's first wheel	73.35
Blake	71.69
Tyler	71.23
Geyelin's (double) first wheel	67.99
Smith's Parker's second wheel	67.26
Merchant's Goodwin	64.12
Mason's Smith	63.24
Andrew's first wheel	62.05
Rich	61.32
Littlepage	54.15
Monroe	53.59
Collin's first wheel	47.34

The next tests of turbines, whose records are available, were conducted in 1876 at the Centennial Exposition in Philadelphia, as follows, the figures giving the efficiency at full gate:

Digitized by Google

		Per Cent.
20-inch wheel,	Barker & Harris	68 -76.3
30	Risdon	86.5-87.7
24	Knowlton & Dolan	76.3-77.4
24	A. N. Wolff, first test	70.9-73.1
	A. N. Wolff, second test	72.6-74.9
26	Noye & Sons, Buffalo	59.4-65.3
27	Goldie & McCullough, Galt, Ont	73.7-82.2
30	John Tyler, Clairmont, N. H	76.1-78.8
24	Wm. F. Mosser, Allentown, Pa	72.7-75.1
26½	Bollinger, York, Pa	68 -70.5
27	Bollinger, York, Pa	63.7-73.7
27	Experimental, York Mfg. Co., York, Pa	51.2-64.6
25	National, Bristol, Conn	75.9-83.8
30	Cope & Sons, W. Chester, Pa	66.8-79.1
25	Tait's Centennial, Rochester, N. Y	73.8-82.1
36	Geyelin's double Jonval, R. D. Wood & Co	76.4-78.2
36	Geyelin's single Jonval, R. D. Wood & Co	77 -83.4
24	Chase Mfg. Co., Orange, Mass	60.3-68.3
24	Rodney Hunt, Orange, Mass	76.6-78.8
30	Stout, Mills & Temple, Dayton, O	66.7-68.5

The test efficiencies of 1879–1880 at Holyoke, Mass., as published by the Water Power Co. are here summarized:

	Per Cent.		Per Cent.
Wemple	72.6-75.6	Wetmore	76.0-77.8
Tyler	78.1-82.2	Royer	66.9-75.2
Moessinger & H	58.9-72.6	Monarch	41.4-50.3
Victor	80.4-83.3	New American	74.2-77.2
Walsh	72.1-74.4	Hercules	76.5-82.9
King	57.0-62.6	Royer	77.0-80.0
Tyler	79.7-80.3	Cyclone	34.2-52.5
Thompson	69.8-72.4	Hunt	80.0-85.2
Sherwood	66.5-67.7	Mercey	64.5-70.6
Perry	76.6-81.4	Rechard	67.0-69.7
Reynolds	72.0-78.6	Economical	54.7-55.6
New American	75.2-77.8	Stowe	73.5-78.0
Hummingbird	62.9-66.3	Risdon	76.6-81.5
Success	72.9-78.9	Victor	87.5-92.3
Success	80.5	Boyden	80.8-83.6
Tait	64.8-77.8	Hercules	74.5-78.2
Nunesuch	72.9-75.7	Curtis	69.4-83.6
Hercules	75.0-80.7	New American	75.2-79.6
Houston	80.7-81.8		

James Emerson began his turbine testing in 1869 and published the following results of efficiencies up to 1880:

Digitized by Google

			Per Cent.
1874	48-inch wheel,	American	75.98
1873	42	American	70.95
1873	42	American	68.82
1873	25	American	72.44
1873	20	American	69.38
1874	60	American	73.15
1873	48	American	75.46
1872	30	Leffel	74.3
1877	25	Victor	75.3
1877	26	Victor	77.8
1878	15	Victor	87.0
	30	Eclipse, double, Stillwell-Bierce	76.28
1880	25	New American	81.9
1880	20	New American	79.6
1876	30	Tyler	66.18–91.27
1874	44	Risdon	91.32
1877		Wolf	73.8 –84.4
1871		Swede	72.5 –75.2
1873		Wetmore	82.9
1876		Wetmore	71.95–81.7
1877		Perry	82.88
1872		American	76.8
1873		American	68.82–83.1
1874		American	75.98
1872		Case	76.3
1873		Case	72.9
1872		Angell	40.0
1873		Angell	74.5 –85.4
1874		Angell	76.7
1871		Risdon	71.3 –91.3
1873		Tyler	79.2 –81.6
1876		Tyler	66.2 –91.3
1877		Tyler	74.1 –82.4
1878		Humphreys	47.5 –70.2
1877		Victor	75.3 –77.8
1878		Victor	83.6 –88.1
1873		Whitney	74.7 –81.2
1875		McCormick	89.2
1872		Thompson & H	76.2
1878		Libbey	65.5
1871		Davis	63.5
1878		Stowe	80.75
1879		Wemple	75.6
1879		Tyler	82.25
1879		Moessinger	73.3 –81.2

Digitized by Google

It is to be noted that the published turbine results are the best shown on the tests. They represent the turbines operating at or near full gate openings and under the highest efficiency (see p. 162).

The great increase in the use of turbines is indicated by one company, the Leffel, having sold over 12,000 wheels up to 1888, aggregating over half a million horse-power.

In turbine estimates the horse-power varies as the square root of the cube of the head; the quantity of water used and the speed of the wheel vary as the square root of the head; or, otherwise expressed—H.P. varies as $H^{3/2}$; Q and R.P.M. vary as $H^{1/2}$.

The coefficients of discharge through turbines have been discussed on p. 120.

The efficiencies of turbines in this country in practical service may be summarized as follows:

	Per Cent.
Up to 1855	60
1855 to 1860	65
1860 to 1865	67
1865 to 1870	70
1875 to 1880	75
1880 and later	75 to 80

These percentages relate to the turbines operating at about full gate, and to proper settings. The turbines are supposed to be in good mechanical condition without appreciable leakage. The heads and falls are to be measured at the wheels when in operation.

Digitized by Google

Digitized by Google

BIBLIOGRAPHY

Abbott's Hydraulic Engine, Boston, 1835.
Adam's Templeton (see Templeton), 1852.
Alger's Hydromechanics, Naval Academy, 1902.
Angell, on Water Courses.
Amos' Process of Flour Manufacture.
Appleton's Dictionary of Machines, Mechanics, etc., 2 Vols., New York, 1852.
Appleton's American Cyclopædie of Applied Mechanics.
Ball's Natural Sources of Power, New York, 1908.
Banks' Treatise on Mills, London, 1795.
Baird's American Cotton Spinner, Boston, 1860.
Bach's Die Wasserrader, Translation by Prof. Weidner, Madison, Wis., 1913.
Bellasis' Hydraulics, with Working Tables, London, 1903.
Beardmore's Manual of Hydrology, London, 1862.
Bélidor's Architecture Hydraulique, 4 Vols., Paris, 1785.
Bennett's Manufacture of Leather, New York, 1910.
Bennett and Elton's History of Corn Milling, Vol. II, London, 1899.
Bennett's D'Aubuisson (see D'Aubuisson), 1852.
Birkinbine's Turbine Tests in 1859 and 1860. Report Bureau of Water, Phila., 1861.
Bjorling's Water Hydr. Motors, London, 1894.
Blaine's Hydraulic Machinery, New York, 1897.
Bloxam's Metals, London, 1876.
Bodmer's Hydraulic Motors and Turbines, 3d Ed., London.
Bookwalter's Millwright and Mechanic, Springfield, O., 1881.
Brewster's Ferguson (see Ferguson), 1806.
Bresse's Hydraulic Motors, Mahan's Revision, New York, 1869.
Buchanan's Essays on Millwork, Nicholson's Revision, London, 1808–14.
Byrne's Pocket Companion for Mechanics, Machinists and Engineers, New York, 1851.
Byrne's Practical Calculator, Phila., 1852.
Byrne's Practical Model Calculator, Phila, 1866.

Digitized by Google

Campbell's Life Writings of DeWitt Clinton, New York, 1849.
Church's Hydraulic Motors, New York, 1905.
Churchill's Landmarks of Oswego Co., N. Y., Syracuse, 1895.
Chambers' Encyclopædia, 10 Vols., Phila., 1869–1872.
Clark's Onondaga, 2 Vols., Syracuse, N. Y., 1849.
Cullen's Construction of Horizontal and Vertical Water Wheels, London, 1871.
Cone's Flow through Submerged Rectangular Orifices, Washington, 1917.
Craik's Practical American Millwright and Miller, Phila., 1870.
Cyclopædia of Useful Arts, 2 Vols., London and New York, 1854.
Cramer's Useful Information for Cotton Manufacturers, 4 Vols., Charlotte, N. C., 2nd Ed., 1904.
D'Aubuisson's Treatise on Hydraulics, Bennett's Translation, Boston, 1852.
D'Aubuisson's Traité' D'Hydraulique, Paris, 1839.
Davis' Manufacture of Leather, Phila., 1885.
Disston's The Saw in History, 2nd Ed., Phila., 1916.
Disturnell (see Gazetteer), 1842.
DeFontenelle and Malepeyre's Arts of Tannery, Currying and Leather Dressing, Revised by Morfit, Philadelphia, 1852.
Dougherty's Hydraulics, New York, 1916.
Downing's Practical Hydraulics, London, 1855 and 1856.
Donaldson's Principles of Construction and Efficiency of Water Wheels, London, 1876.
Drake's Practical Mechanic, Phila., 1888.
Dussance's Tanning, Currying and Leather Classified, Phila., 1867.
Evans' (Oliver) Young Millwright and Miller's Guide, Phila., Editions of 1795, 1807, 1832 and 1853.
Emerson's (Jas.) Hydrodynamics, Willimansett, Editions of 1878, 1881, and 1894.
Emerson's (Wm.) Principles of Mechanics written 1754, Sears' Revision, London, 1825.
Eubank's Hydraulics and Mechanics, New York, 1850.
Engineer and Machinist's Assistant, 2 Vols., London, 1850.
Fairbairn's Treatise on Mills and Millwork, London, 1878.
Fanning's Hydraulic and Water Supply Engineering, New York, 1891.
Farnham's Water and Water Rights, 3 Vols., Rochester, 1904.
Febre's Hydrauliques, Paris, 1783.
Ferguson's Lectures on Méchanics, Hydraulics, etc., Revised by Brewster, Edinburg, 1806.
Ferguson's Lectures, revised by Partington, London, 1825.

Digitized by Google

Folwell's Water Supply Engineering, New York, 1900.
French's Gazetteer of the State of New York, Syracuse, 1860.
Fry's Civil Engineer's Pocket Book, New York, 1913.
Francis' Lowell Hydraulic Experiments, 4th Ed., 1883.
Grimshaw's Miller, Millwright and Mill Furnisher, 1882.
Gazetteer of the State of New York, Albany, 1813.
Gazetteer of the State of New York, Albany, 1824, by Spofford.
Gazetteer of the State of New York, Albany, 1836, by Gordon.
Gazetteer of the State of New York, Albany, 1842, by Disturnell.
Gazetteer of the State of New York, Syracuse, 1860, by French.
Gibson's Hydraulics and Its Applications, New York, 1908.
Gihon's Overman (see Overman), 1851.
Glynn's Power of Water, London, 1885.
Grier's Mechanic's Calculator, Philadelphia Editions of 1842 and 1846; Scotch Edition of 1832.
Gregory's Treatise on Mechanics, 3 Vols., London, 1806.
Gregory's Mathematics for Practical Men, written 1825, London, Law Revision, 1848.
Hardy's Landmarks in Paper Making, Fitchburg.
Haslett's Book of Reference and Engineer's Field Book, Edited by Hackley, New York, 1859.
Haswell's Engineers' and Mechanics' Pocket Book, New York, Editions of 1844, 1848, 1854, 1860, 1878, and 1909.
Hewson on Levees, New York, 1870.
Hebert's Engineer's and Mechanic's Encyclopædie, 2 Vols., London, 1849.
Herschell's Frontenus and Water Supply of Rome, New York, 1899.
Hill's Pocket Manual for Engineers, Providence, 1883.
Holliwell's Technics of Flour Milling, 2d Ed., London, 1904.
Hough's History of Jefferson Co., N. Y., 1854.
Horton's Turbine Water Wheels and Power Tables, Washington, 1906.
Horton's Weir Experiments, Coefficients and Formulæ, Washington, 1906.
Horton's Turbine Water Wheel as a Prime Mover, Potsdam, N. Y., being Clarkson Bulletin VII, No. 1, Jan., 1910.
Howard and Bullough's Cotton Machinery, 1909.
Hughes' American Miller and Millwright's Assistant, Phila., Editions of 1851, 1853, 1859, 1866, 1884.
Innes' Centrifugal Pumps and Turbines, 1901.
Jackson's Hydraulic Works, London, 1885.
Jamieson's Dictionary of Mechanical Sciences, 2 Vols., London, 1836.
Jamieson's Mechanics for Practical Men, London, 1840.
Kent's Mechanical Engineers' Pocket Book, New York, 1916.

Digitized by Google

Knight's American Mechanical Dictionary, 3 Vols., New York and Cambridge, 1876.
Knight's New Mechanical Dictionary, Boston, 1884.
Kick's Treatise on Milling Science and Practice, translated from the German by Powles.
Kozmin's Flour Milling, translated from the Russian by Falkner and Fjelstrup, New York, 1917.
Langsdorf's Lehrbushler Hydraulics, Allenburg, 1794.
Lea's Hydraulics, 1907.
Leonard's Mechanical Principia, New York, 1848.
Levy and Mannel's Tanners and Chemists' Hand Book, 1909.
Lineham's Text Book of Mechanical Engineering, London, 1904.
Lister's Cotton Manufacture, London, 1894.
Little's Story of a Wonderful Flour Mill, 1917.
Library of Useful Knowledge, 15 Vols., New York, 1881.
Mahan's Bresse (see Bresse), 1869.
Mahan's Civil Engineering, New York, 1879.
Mead's Notes on Hydrology, 1904.
Mead's Water Power Engineering, New York, 1908.
Meyer's References on Water Rights and Control of Waters, 1914.
Merriman's American Civil Engineers' Pocket Book, New York, 1911.
Merriman's Treatise on Hydraulics, New York, 1889, 1910.
Millers' Review for 1913–1917, Phila.
Mitchell's Dictionary of Mathematics and Physical Sciences, London, 1823.
Michelotti, Sperimenti Itraulici, Forina, 1767, 2 Vols.
Morin's Hydraulique, Paris, 1758.
Moore's Universal Assistant and Complete Mechanic, New York, 1880.
Morris' (Elwood) Tests of Fourneyron Turbines, Journ. Frank. Inst., 1843.
Molitor's Hydraulics of Rivers, Weirs, Sluices, New York, 1905.
Mollet's Hydraulique Physique, Lyons, 1809.
Molesworth's Pocket Book of Useful Formulæ and Memoranda, London, Editions of 1871 and 1894.
Morfit's Arts of Tanning, Currying and Dressing Leather, Phila., 1852.
Neville's Hydraulic Tables, Coefficients and Formulæ, London, Editions of 1853, 1860–1861, and 1875.
Nicholson's Operative Mechanic and Machinist, London, 1826.
Nicholson's Buchanan (see Buchanan).
Nordyke and Marmon's Milling Books, Indianapolis.
Nystrom's Pocket Book of Mechanics and Engineering, 9th Ed., Phila., 1865.

Digitized by Google

Oliver's Miller and Milling Engineer, Indianapolis, 1913.
Operative Miller, Chicago.
Overman's Mechanics for Millwrights, etc., Gihon's Edition, Phila., 1858, also 1851.
Oswego City and Business Directory and Compendium of Useful Information, Oswego, N. Y., 1852.
Oswego's Commercial Times, 2d Annual Review of the Trade and Commerce for 1858, Oswego, 1859.
Oswego, Churchill's Landmarks, Syracuse, 1895.
Pallett's Miller's, Millwright's and Engineer's Guide, Phila., Editions of 1866 and 1890.
Parker's Control of Water, London and New York, 1915.
Perry's Applied Mechanics, 1898.
Proctor's Principles of Leather Manufacture, Spon, 1903.
Proctor's Leather Industry's Laboratory Book, Spon, 1908.
Partington's Ferguson's Lectures, London, 1825.
Rankine's Manual of the Steam Engine and Other Prime Movers, 9th Ed., London, 1878.
Rankine's Manual of Applied Mechanics, London, 1877.
Rankine's Civil Engineering, London, 1880.
Rankine's Machinery and Millwork, London, 1880.
Robinson's Hydraulic Power and Hydraulic Machinery, London, 1887.
Russel's Text Book on Hydraulics, New York, 1910.
Sam's Mechanical Engineering.
Schmeer's Flow of Water, New York, 1909.
Scott's Practical Cotton Spinner and Manufacturer, Phila., 1851.
Schultze's Leather Manufacture, New York, 1876.
Scribner's Engineers' and Mechanics' Companion, 18th Ed., New York, 1878.
Smeaton's Reports, London, 1797.
Smeaton's Tracts, London, 1794.
Smith's (Hamilton) Hydraulics, etc., New York, 1886.
Strange's Indian Storage Reservoirs, London, 1904.
Stone's Simple Hydraulic Formulæ, 1881.
Stevenson's Canal and River Engineering, Edinburgh, 1858.
Spon's Encyclopedia of Industrial Arts, London, 1879.
Spon's Dictionary of Engineering, 8 Vols., London, 1871.
Sullivan's New Hydraulics, Denver, 1900.
Switzer's Hydrostatics and Hydraulics, London, 1779.
Swingle's Practical Hand Book for Millwrights, Chicago, 1910.
Supplee's Mechanical Engineer's Reference Book, 2d Ed., 1905.
Taylor, in Journ. West. Soc. of Engrs., III, 879.

Digitized by Google

Templèton's Engineer, Millwright and Mechanic's Pocket Companion, 8th English Ed., Revised by Adams, New York, 1852.
Thomas' Composition of Several Classes of American Wheats, etc., Washington, 1917.
Tomlinson's Cyclopædie of Useful Arts, 2 Vols., London, 1852.
Trimble's The Tanniris, Phila., 1892.
Trautwine's Engineer's Pocket Book, New York, 1907.
Tredgold's Hydraulic Tracts, 2d Ed., London, 1836.
Turneaure and Russell's Public Water Supplies, New York, 1910.
Unwin's Treatise on Hydraulics, London, 1907.
Venturoli's Elementi Di Meccanicæ, 2 Vols., Rome, 1826.
Watt's Leather Manufacture, London, 1906.
Water power, Parts I and II, 10th U. S. Census, Vols. XXVI, XXVII.
Weidner's Translation of Bach's Die Wasserrader, Madison, 1913.
Weidner's Theory and Test of an Overshot Water Wheel, Bulletin 520 Univ. of Wis., Madison, 1913.
Weber and Others on Turbine Tests at Centennial Exposition, 1876.
Webber on Water Wheels, Trans. A.S.M.E., XVIII, 41.
Webber's Manual of Power for Machines, Shafts and Belts, New York, 1891.
Wells' Water Power of Maine, Augusta, 1869.
Weisbach's Mechanics of Machinery and Engineering, 1st American Ed. of Prof. Johnson, Phila., 1848.
Whitin Machine Works, Cotton Machinery.
Winslow's Machinist's and Mechanic's Practical Calculator and Guide, 3d Ed., Boston, 1855.
Wilme's The Civil Engineer, 1846.
Wolfe's Milling Machinery.
Young's History of American Manufacturers, Vol. II, Phila.
Young's (Dr.) Natural Philosophy and Mechanical Arts, 2 Vols., London, 1807.
Water Turbine Wheel Books:
Adams, Boston, Mass, 1858.
American and New American, 10 Editions, Dayton, O.
Amsterdam-Jonval, Amsterdam, N. Y.
Amsterdam-Fourneyron, Amsterdam, N. Y.
Alcott, Mt. Holly, N. J., 3 Editions.
Allentown or Eureka, Allentown, Pa.
Adams, or Helmer, or Rome, Rome, N. Y.
Bodine-Jonval, Mt. Morris, N. Y.
Bradway, W. Stafford, Conn.
Bastion. of Watertown, N. Y.

Digitized by Google

Water Turbine Wheel Books, *Continued:*
Bartley, Bartley, N. J.
Burnham, York, Pa.
Ridgeway's Perfection, Coatesville, Pa.
Chase-Jonval, Orange, Mass.
Cope, West Chester, Pa.
Curtis, Ogdensburg, N. Y.
Carley or Syracuse, Syracuse, N. Y.
Camden, Camden, N. Y.
Camden U. S., Camden.
Canada Wheel, Reading, Pa.
Christiana, Christiana, Pa.
Dubuque-McCormick, Dubuque, Iowa.
Dix-Jonval, Glen Falls, N. Y.
Eclipse Double Turbine, Dayton, O.
Eureka, Allentown, Pa.
Fitz Overshot, Hanover, Pa.
Flenniken, Dubuque, Iowa.
Fourneyron, McElwain, Amsterdam, N. Y.
Gulden's Overshot, Bendersville, Pa.
Gulden's Turbine, Bendersville, Pa.
Helmer, or Rome, N. Y.
Hercules, Holyoke and Worcester, Mass., 4 Editions.
Haig's Reliance, Reading, Pa.
Hunt-McCormick, Orange, Mass., 5 Editions.
Humphreys IXL and LCR, Keane, N. H.
Jolly-McCormick, Holyoke, Mass.
Kaiser, Chambersburg, Pa.
Leffel, Springfield, O., 12 Editions.
Little Grant, Dolan's Logansport, Ind.
Wilson, Picton, Ont.
Pheonix, Munson, Utica, N. Y.
Lesner, Wemple of Fultonville, N. Y.
Moline-McCormick, Moline, Ill.
Poole and Hunt's Leffel, Baltimore, Md.
Risdon, Mt. Holly, N. J.
Risdon-Alcott, Mt. Holly, N. J.
Raney Turbine, Pittsburg, Pa.
Reliance, Reading, Pa.
Reynolds, Oswego, N. Y.
Rechard.
Swain, Lowell, Mass.

Digitized by Google

Water Turbine Wheel Books, *Continued:*
Sullivan's Wetmore, Clairmont, N. H.
Smith, York, Pa., 11 Editions.
Success, York, Pa., 3 Editions.
Trump, Springfield, O.
Victor, Dayton, O., 13 Editions.
Warren of 1853, Boston, Mass.
Waits Champion, Sandy Hill, N. Y.

Digitized by Google

INDEX

PAGE

Accompanying machinery, flour mills 8, 12, 14, 25
Ajutage, long known, not allowed 111, 112
Aperture or orifice water grants 109
  Ajutage long known 111, 112
  Ajutage not allowed 111
  Examples 109–12
  See " Coefficients."
  179 N. Y. A. D. 332 110
  2 Wharton 477 111
Axe Factory 70

Bark Mill (see " Tannery ") 66
Blast furnace, bellows, blowers 73
  Carthage decree 74
  D'Aubuisson's example 75
  Haswell's examples 73–74
  Hewitt, N. J 75
  Leonard on power for 75
Breast wheels 170
  Bucket filling 175
  Coefficient of discharge 117, 170
  Efficiency 171, 175
  Falls adapted for 163, 170
  Head and fall 159, 171
  Kinds of 170
  Leakage 175
  Rankine's rule 169, 175
  Smeaton's maxims 153
  Speed of 171
Buhr mills (see " Run of Stone ").
Bulkhead gates, coefficient for 115

Digitized by Google

PAGE
Carding and fulling mills 80
Carthage mill 81
Dexter water grant 80
Equal to run of stones 81
Evans on 81
Oswego water lease 81
Central-discharge, flat-vaned, scroll-cased wheels 138
Coefficient of discharge 119, 145
Construction of 139
Description 138
Efficiency 145
Examples 142–144
Coefficient of discharge 113–121
Breast wheels 117
Bulkhead gates 115
Central-discharge wheels 119
Definition 114
Flutter wheels 117
Overshot wheels 117
Spout wheels, 50 Hun 497 120
Standard orifices 113–115
Court decisions 114
Orifice defined 115
Rounded orifices 115
Theoretical discharge 115
Tub wheels 119
Turbines 120
Undershot wheels 117
Corn cracker or crusher 48
Definition 48
History of 49–52
Kinds 49–52
Power 53
Corn meal and feed mills 45
Corn cracker or crusher 48
Power used 45, 48
Weight of corn 45
Cotton mills 87
Abbott on power 88
Baird on power 96
Building, space 91
Changes in power demands 101

Digitized by Google

PAGE
Cotton mills, Emerson's tests 99, 100
Glasgow mill lease 93
Groat *v.* Moak 95
History of 88
Janesville mill 100
Leonard on 90–93
Lowell standard 89, 106
Manufacturers' tables 101
Mill power 89
Moore's example 96
Operation in 87
Oswego lease 94
Power, various authorities 96
Rocky Glen mill 94
Spindles and power per building 91
Throstle and other spindles 96
Webber's tests 97–99
Whitham's tests 100
Whitman's lease 95

Definitions, bark mill 66
Coefficient of discharge 114
Corn cracker 48
Cuboch 4
Flouring mill 44
Grist and grist mill 44
Orifice 113, 115
Run of stone 44
Turbine 176
Discharge (see " Coefficient ").
Distillery water grant 53

Efficiency (see the particular wheel).

Feed mills 45
Flax (see " Oil mill ").
Flutter or saw mill wheels 129
Carthage wheels 132
Coefficient of discharge 117, 129
Craik and Haswell 131
Efficiency 132
Ellicott, 1795 130

Digitized by Google

PAGE
Flutter or saw mill wheels, Evans and Pallett 130
Saw mill grants 129
Fulling (see " Carding Mill ").

Grist mill defined 44
Decree at Carthage 37
Fulton 32
Little Falls 33
Ogdensburg 32
Plattsburg 35
Haswell and others 38, 39
Power for grist mill 42
Power per run 28, 37, 38, 44
Powers *v.* Perkins 38
Run of water at Dayton 26
Slow speed of stones 15
Small product 15
Two runs needed 42
Whitham's tests 44

Head gate discharge coefficient 115

Inches of water defined 126
Carthage decree 36, 60, 69, 70, 74
Coefficient of discharge 126
Differs from aperture grant 122
Engineering meaning 122–126
Grants in inches 122
Janesville Cotton Mills *v.* Ford 128
Origin of term 122–126
Palmer *v.* Angel 127
Practical construction 30, 128
Quantity of water and not power is meant 127
Theresa tannery 67
Iron works, blast furnace 73
Nail factory 79
Rolling mill 76
Trip-hammer 77

Linseed (see " Oil Mill ").

Digitized by Google

PAGE
Machine shop grant.... 70
Carthage decree.... 71
Lyman's lease.... 72
Whitham's tests.... 72
Merchant buhr mills.... 17, 18
Definition.... 9, 44
Haswell and others.... 38, 39
In Oswego.... 28
Large product and power.... 15
Power per 100 barrels of flour.... 21
Power to grind and dress a bushel of wheat.... 8
Power to grind bushel wheat.... 4
Power per run of stone.... 28, 44
Systems of milling.... 43
See " Run of Stone."

Nail factory.... 79

Oil Mill.... 107
Orifice (see " Aperture ").
Oswego milling history.... 19, 21, 22
Cotton mill lease.... 94
Emerson's views.... 31
Flour per run per day.... 18, 21
Leases on hydraulic canal.... 28, 29
Brown.... 81
Lyman.... 72
Varick decree.... 26
See " Run of Stone."
Overshot water wheels.... 154
Bucket filling.... 167
Coefficient of discharge.... 117, 154
Efficiency.... 159–163
Evans' examples.... 155
Examples.... 164–167
Falls adapted for.... 163
Head and fall.... 158–159
Head on wheel.... 155, 168
Hewitt, N. J.... 76
Pitch-back.... 170
Rankine's rule.... 169
Size and number of buckets.... 168

Digitized by Google

PAGE
Overshot water wheels, Smeaton's maxims 153
Speed of wheel 154–158

Paper mills 102
Caswell's grant 106
Developments in 102
Examples 104–106
Sunnydale mill 106
Writing mills 106
Pearl barley mills 54
Pitch-back wheels 170
Plaster mills 102
Poncelet wheels 153
Power for Milling (see "Wheat," "Run of Stone," "Grist Mills" and "Merchant Mills").

Roller mills, power grinding wheat 8
Power grinding and dressing wheat 14
Power per 100 barrels of flour 21
Whitham's tests 24
Rolling mills (iron) 76
Run of Stone, Brewster's rule of 1806 17
Carthage decree 36
Corn and feed mills 45
Dedrick on power 43
Definition 44
Distillery buhr 53
Evans on power 135
Fulton decree 32
Grist mill 37, 44
Haswell and others 38, 39
High speed in merchant mills 15
Hughes and Pallett on power 39–42
Little Falls decree 33
Merchant mills 44
Ogdensburg decree 32
Plattsburg decree 34–36
Power grinding and dressing bushel of wheat 8
Power grinding bushel wheat 4
Power in grist mills 28, 37, 38, 44
Power in merchant mills 28, 44
Power per 100 barrels flour 21

Digitized by Google

PAGE
Run of Stone, Power variation with stones 17
Powers *v.* Perkins 38
See "Oswego."
See "Water grants and leases."
Slow speed in grist mills 15
Speed of 15
Starch mill stone 53
Varick decree 26
Wheat ground per run 17
Run of water at Dayton 26

Saw mills 56
Carthage decree 60
Circular saws 61–64
Examples 58–65
Gang saws 61, 62
Grants of water for 57
Illustration 57
Power for circular saws 63–65
Power for single saw 58–61
Power, various woods 58
Speed of saw blades 56
Water grants for 57, 129
Water wheel used 57
Shingle mills 64
Split-pea mills 55
Starch mills 53
Stones in flour mills (see "Run of Stone")
Sumac mill 70

Tanneries 66
Bark mill or grinder 66
Bark mill tests 67
Carthage decree 69
Cover tannery 67, 69
Hiteman tannery 70
Hubbard tannery 68
Janney tannery 69
Mosser tannery 69
Power per 100 hides 67, 68
Theresa tannery 67
Trip or tilt hammer 77, 151

Digitized by Google

PAGE
Tub wheels 132
Coefficient of discharge 119, 132
Description 132
Efficiency 137
Emerson's test 136
Evans on 134, 135
Examples 136
Water grant 132
Turbines 176
Classes of 277
Coefficient of discharge 120
Definition 176
Development of 177, 178
Efficiency 180–185

Undershot wheels 146
Bucket or float immersion 148
Coefficient of discharge 117, 146
Depth of floats 149
Depth of stream 149
Efficiency 152
Examples 151
Head range 149
Horse-power 151
Number of floats 149, 150
Poncelet wheel 153
Size of 149
Smeaton's maxims 153
Smeaton's tests 146
Speed of 146, 147

Water grants and leases:
Ansonia, Conn 110
Axe factory 70
Bark mill and tannery 66
Birmingham, Conn 110
Blast furnace, bellows, blowers 73, 76
By aperture or orifice 109, 122
By breast wheels 170
By central-discharge wheels 138
By flutter wheels 129
By inches of water 122

Digitized by Google

PAGE

Water grants and leases:
By overshot wheels 154
By pitch-back wheels 170
By Poncelet wheels 153
By saw mill wheels 56, 129
By tub wheels 132
By turbines 29, 176, 179
By undershot wheels 146
Carding and fulling mill 80
Carthage decree 36, 46, 60, 67, 69, 74, 78, 79, 132, 136, 151, 174
Cohoes, N. Y. 109
Corn cracker 48, 179
Cotton factory 87, 93, 95
Dayton, Ohio 26
Dexter, N. Y. 110
Distillery 53
Doctrine of practical construction 30
Emerson on 31
Feed mills 45
Flouring mills (see Merchant buhr mills).
Fulton decree 32
Glasgow cotton mills 93
Grist mills 26, 28, 32, 35, 38, 44
Groat *v.* Moak 86, 95
Hewitt, N. J 75
Hydraulic canal, Oswego 19, 21, 26, 28, 29, 68, 72, 81, 94
Janesville Cotton Co. *v.* Ford 128
Little Falls decree 33, 95
Lowell standard 89
Machine shop 70
Nail factory 79
Oat meal mill 54
Ogdensburg decree 32
Oil mill 107
Palmer *v.* Angel 127
Paper mill 102, 106
Pearl barley mill 54
Plaster mill 102
Plattsburg decree 34–36
Powers *v.* Perkins 38
Roller flour mills 7, 13, 14, 21, 24
Rolling mills (iron) 76

Digitized by Google

Digitized by Google